RA

Service Manual



Pye Telecommunications Ltd

UHF FM Mobile Radiotelephone Type M296

Publication Ref No. TP264

WARNING

Certain semiconductor devices used in this equipment contain Beryllium Oxide. If inhaled, dust from this oxide can be toxic.

No danger can arise from normal handling but no attempt should be made to tamper with these devices.

They should not be discarded with industrial or domestic waste.

This Service Manual is for the maintenance of Pye Telecommunications equipment. The performance figures quoted are typical and are subject to normal manufacturing and service tolerances.

The right is reserved to alter the equipment described in this manual in the light of future technical development.

UHF FM MOBILE RADIOTELEPHONE
TYPE M296
SERVICE MANUAL
ISSUE 1 APRIL 1980

PYE TELECOMMUNICATIONS LIMITED CAMBRIDGE ENGLAND
Printed in England
© 1980
TP264

AMENDMENT LIST

Changes made to the equipment described in this manual are published as amendments which are dated and consecutively numbered.

Reprints of the manual will incorporate all the amendments to date and an entry to this effect will be recorded on the amendment list below. Each page affected by amendment action will bear the amendment number as a suffix to the manual reference number e.g. TP123/4 indicates that the page has been corrected by amendment number 4.

Should it be necessary to raise the issue of a manual the amendment numbering will recommence with No. 1.

Amend't No.	Date	Initials	Remarks
1	July 1981		Incorporated

ERRORS & OMISSIONS

The usefulness of this Service Manual depends upon its accuracy. Whilst every endeavour has been made to minimise errors, some may exist. It is therefore requested that any errors or omissions noted be advised as follows:–

Please quote:

a) Title of manual
b) TP No. and Issue No.
c) Last amendment No. received
d) Page and/or Fig. No. in error

Please send to:

Pye Telecommunications Ltd.
Publications Dept.
Mariners Way
Cambridge CB4 1BN
England

CONTENTS

		Page
SECTION 1	GENERAL INFORMATION	
	Summary of Data	1.1
	Introduction	1.3
	Equipment Variations	1.4
SECTION 2	INSTALLATION AND OPERATION	
	Pre-Installation Checks	2.1
	Netting Procedure	2.2
	Test Frequency Crystal Information	2.2
	Contents List	2.3
	Installation	2.4
	Connection of Ancillaries	2.10
	Voltage Converter VC290	2.10
	Antenna Information	2.11
	Operation	2.14
SECTION 3	TECHNICAL DESCRIPTION	
	Receiver Circuit Summary	3.1
	Transmitter Circuit Summary	3.2
	Power Distribution and Switching	3.2
	Power Supplies	3.3
	Receive Switching	3.3
	Transmit Switching	3.3
	Detailed Circuit Description	3.3
	Receiver	3.3
	Transmitter	3.4
	Automatic Level Control	3.5
	10V Regulator	3.5
	25W UHF PA Module	3.6
	Transmission Timer	3.6
SECTION 4	SERVICING	
	Precautions and General Information	4.1
	Construction	4.2
	Equipment Access	4.3
	Crystal Information	4.3
	Test Equipment	4.3
	Alignment Procedures	4.4
	Receiver Alignment	4.5
	Receiver Performance Checks	4.6
	Transmitter Alignment	4.7
	Audio Alignment	4.9
	Conclusion	4.9
	Fist Microphone	4.10

SECTION 5	PARTS LIST	Page
	Notation	5.1
	Ordering of Spare Parts	5.1
	Abbreviations	5.1
	UHF Front Mount Mobile Radiotelephone Type M296	
	Miscellaneous	5.2
	Radiotelephone Installation Items	5.2
	Microphone Installation Items	5.3
	Microphone Assembly	5.3
	25W UHF PA Module	5.4
	PWB Assembly Tx/Rx	5.4
	Rear Panel Assembly	5.9

SECTION 6	DIAGRAMS
	See List of Illustrations

LIST OF ILLUSTRATIONS

Fig. 2.1	Typical Installation	2.7
Fig. 2.2	Basic Installation	2.11
Fig. 3.1	Block Diagram – Transmitter/Receiver	3.1
Fig. 3.2	Power Supplies and Switching Block Diagram	3.2
Fig. 4.1	Diode Probe Circuit Diagram	4.4
Fig. 4.2	Connection of Test Equipment – Receiver Testing	4.5
Fig. 4.3	Connection of Test Equipment – Transmitter Testing	4.7
Fig. 4.4	Alignment Diagram	4.9
Fig. 5.1	Exploded View	5.9
Fig. 6.1	M296 Component Location Diagram	
Fig. 6.2	M296 Transmitter/Receiver Circuit Diagram	

SECTION 1

GENERAL INFORMATION

SUMMARY OF DATA

General

Operation	A3, single or two-frequency simplex
Modulation	Phase (frequency), F3
Frequency Bands	T1 Band – 405–440 MHz U0 Band – 440–470 MHz
Channel Spacing	20 kHz – R 25 kHz – V temperature controlled
No. of Channels	Single, or 1 to 6 channels
Operational Environment	This equipment is designed for operation from −30°C to +60°C and meets EIA recommendations or relevant national specificiations
Frequency Stability	±5 ppm over range −30°C to +60°C
Power Supply	12V (nominal) DC supply. Negative ground
Current Consumption	Receive (standby) approximately 300 mA Transmit – Approximately 7 amps at 25W output power
Operator Controls	On/Off switch Volume Channel selector (multiple channel only) Options controls (when fitted) Transmit/receive switch (on microphone)
Indicator Lamps	(i) 'On' indicator lamp – green. Light pipe diffuses light through graphics and edge lights volume and on–off control. It also illuminates channel numbers (when fitted). (ii) Transmit indicator lamp – red (iii) Various indicator lamps depending on options
Cabinet Radiation	To CEPT, or relevant national specification
Dimensions	Main unit: 180 mm wide × 52 mm high × 190 mm deep (7,1 × 2 × 7,5 in.) Loudspeaker unit: 146 mm wide × 95 mm high × 67 mm deep (5,7 × 3,7 × 2,6 in.)
Weight	Main Unit: 2,5 kg (5,5 lb) Loudspeaker Unit: 0,5 kg (1,1 lb)
Options*	(i) VC290 add-on unit for 12/24V DC positive or negative ground systems (ii) Range of selective call modules (iii) CTCSS (Tone Lock). Single tone or 6-tone selectable

Options* (Continued)	(iv) Selective call and CTCSS combined (v) Transmission timer, incorporated in microphone (vi) Desk-top power supply type AC200 PU (vii) Up to 2 m (6 ft.) extended control with microphone/Controller. Single channel only. Includes volume control, On lamp, Tx call and Busy lamps, and provision for squelch defeat (viii) Transportable conversion unit (P200 PU) (ix) Special locking cradle for 180 mm × 52 mm car radio aperture

Receiver

Input Impedance	50Ω
SINAD ratio	12 dB SINAD at 0,35μV PD signal input at 60% deviation with 1 kHz modulation
Audio Output	Minimum 3W with less than 5% distortion into 3Ω load. Alternatively speakers can be connected in parallel resulting in 6W into 1,6Ω load with less than 10% distortion
Audio Response	+1 dB to −3 dB of a 6 dB per octave de-emphasis characteristic between 300 Hz and 3 kHz
Spurious Response Attenuation	Better than 85 dB, including image frequency
Squelch Sensitivity	Adjustable by preset control and factory set to 10 dB SINAD
Switching Bandwidth	±0,2% of the mean frequency between the lowest and highest switched channels over the temperature range −30°C to +60°C
Adjacent Channel Selectivity	100 dB
Intermodulation Attenuation	75 dB

Transmitter

Output Impedance	50Ω
Power Output	Continuously adjustable from 1W to 25W, factory preset to 1W, 6W, 10W, 15W or 25W, measured at 13,2V DC input
Spurious Outputs	Each less than 0,25μW
Modulation Deviation	±4 kHz for 20 kHz channel spacing ±5 kHz for 25 kHz channel spacing
Modulation Response	+1 dB to −3 dB of a 6 dB per octave pre-emphasis characteristic between 300 Hz and 3 kHz
Modulation Distortion	Less than 3% at 60% system deviation

Switching Bandwidth	±0,5% of the mean frequency between the lowest and highest switched channels over the temperature range −30°C to +60°C
Modulation Sensitivity	Adjustable between 1mV and 25mV for 60% system deviation
Hum and Noise Level	Better than −55 dB

* Details of options will be issued as information becomes available.

Typical figures based on normal operating conditions. Pye policy is one of continuous improvement; therefore the right is reserved to change specifications without notice.

INTRODUCTION



The Pye M296 is a front-mount UHF FM mobile radiotelephone designed for two-way communication between mobiles and a base station. The equipment operates on fixed, crystal-controlled frequencies in the range 405–470 MHz, using either single or two-frequency simplex working.

Single and multiple channel versions of the radiotelephone are available; in multiple channel sets, provision is made for up to six communication channels, spaced within the equipment switching bandwidth.

The receiver delivers 3W at less than 5% distortion into a 3Ω load. Alternatively, the use of two loudspeakers in parallel allows the receiver to deliver 6W at less than 10% distortion into a 1,6Ω load. This arrangement is intended for use in environments having a high level of background noise.

The transmitter generates a modulated carrier of 6W into a 50Ω load. The RF output is continuously adjustable down to 1W by means of a potentiometer. With the addition of a separate amplifier module, fitted internally, the 6W output can be increased to 25W which can be continuously adjusted down to 10W. Equipments are normally despatched preset to 1W, 6W, 10W, 15W or 25W to meet specific local requirements.

The power supply is 12V nominal, negative ground, with provision for switching auxilaries via the transmitter/receiver on/off switch. A voltage converter unit type VC290 can be used with 12/24V DC positive or negative ground systems.

The complete installation comprises a compact transmitter/receiver, external loudspeaker, fist microphone and associated fixings. Space is reserved within the transmitter/receiver for optional signalling modules, whose status and related visual information can be displayed on the front panel.

EQUIPMENT VARIATIONS

Information Label

The catalogue and serial numbers together with the transmit and receive frequencies for each channel, when known, are shown on the equipment label attached to the transmitter/receiver rear panel assembly.

Should the equipment be supplied "less crystals" it should be checked on the recommended test frequencies as detailed under 'Test Frequency Crystal Information' in Section 2 of this publication.

Market Code

01 – Standard Production

Installation Items

The equipment can be supplied (by agreement) as follows:–

0 – Less installation items
1 – With standard mounting kit and loudspeaker
2 – With standard mounting kit less loudspeaker
3 – With fascia mounting kit and loudspeaker
4 – With fascia mounting kit less loudspeaker

No. of Crystalled Channels

0 – Less crystals
1–6 – No. of crystalled channels

Transmitter Power

1 – 25 Watts (standard test setting for all high power equipments despatched less crystals)
2 – 15 Watts
3 – 10 Watts
4 – 6 Watts (standard test setting for all low power equipments despatched less crystals)
5 – 1 Watt

Function

0 – Less front panel
1 – Less tone options, front panel fitted with Pye ident label
2 – Less tone options, front panel less Pye ident label
3 – Fitted with TED 1 or TED 2 (see publication reference No. TP213 or TP212 for full details)
4 – Fitted with TED 6 (see publication reference No. TP211 for full details)

Channel Spacing

R – 20 kHz
V – 25 kHz
temperature controlled

SECTION 2

INSTALLATION AND OPERATION

PRE-INSTALLATION CHECKS

> CAUTION
>
> 'Pozidriv' screws are used in this equipment. Use only the appropriate size of 'Pozidriv' screwdriver.

1. Unpack container and check items against Contents List given in this section.

   Note: Pye Telecommunications Ltd, or their authorised agents, must be notified by letter within ten days of receipt of equipment, if any damage or shortages are found.

2. Fit the fuse supplied into fuseholder and connect power supply to equipment, ensuring that the live lead is fused and that supply polarity is correct (−ve ground). Adjust the power supply for 13,2V output.

3. Using a signal generator, AF output meter and RF output meter, check equipment serviceability as follows:−

   Notes: 1. The following check is intended only as a means of rapidly checking equipment serviceability. It does not replace or preclude any of the tests and adjustments quoted in Section 4 of this service manual.

   2. Crystals are normally fitted before shipment, and the Information Label (on equipment rear panel) suitably inscribed with details of Tx and Rx frequencies for each channel. Should the equipment be shipped less crystals, it should be checked on the recommended test Frequencies detailed on page 2.2.

   (a) Connect AF output meter to loudspeaker socket and connect signal generator to antenna socket, ensuring press-to-talk switch cannot be accidently operated.

   (b) Adjust signal generator to receiver channel frequency, modulated 1 kHz at 60% system deviation. Set signal level to 1μV PD.

   (c) Press the Off/On button, and check that the 'On' Lamp is lit. Select the required channel by rotating the channel selector switch until the appropriate number appears in the centre of the aperture. Using a marker oscillator in the vicinity of the 1st IF stage, adjust the generator frequency for a zero beat. Check that an output of 3W is obtainable by adjusting the volume control.

   (d) Disconnect signal generator and AF output meter.

   (e) Connect RF output meter to the antenna socket and carry out Operating Instructions for TRANSMIT. With power supply set to 13,2V, check that power output is to specification.

NETTING PROCEDURE

Equipment Required

Power Supply, set to 13,2V
Frequency Counter
Marker Oscillator

Procedure

Notes: With the exception of the following procedures, oscillator coils should only be adjusted with reference to a frequency sub-standard.

These procedures must be repeated as a matter of routine at intervals of not more than six months. See 'Routine Frequency Adjustment' in Section 4.

Withdraw circuit board and stand it on the equipment case, taking care that short-circuits are avoided. If this is not done, the equipment may be found to be off-tune when replaced in its case.

Connect power supply (set to 13,2V), loudspeaker, and antenna to equipment.

Receiver: With carrier received from the base station, hold marker oscillator near IF section. Adjust appropriate crystal coil core for zero audio beat note. Repeat for each crystalled channel.

Transmitter: Loosely couple frequency counter to antenna socket. Transmit (carrier only) and check frequency displayed on counter. Adjust transmitter oscillator coil, if necessary, for correct channel frequency. Repeat for each crystalled channel.

TEST FREQUENCY CRYSTAL INFORMATION (for equipment supplied less crystals)

Band	Tx or Rx	fx	Multiplication	fc	Rx Injection Frequency (MHz)
U0	Tx	14,60156	$\frac{fc}{32}$	467,25	
	Rx	55,3875	$\frac{fc - 21,4}{8}$	464,5	443,1
T1	Tx	13,25	$\frac{fc}{32}$	424	
	Rx	55,175	$\frac{fc + 21,4}{8}$	420	441,4

fx = Test crystal frequency (MHz) fc = Test frequency (MHz)

CONTENTS LIST (INSTALLATION ITEMS)

Description	Part No.	Remarks
M296 transmitter/receiver	AT00237	including carrier plate
Microphone and lead assembly	AT29692/02 or /05	ordered separately
Antenna and lead assembly		Despatched separately when ordered
Radiotelephone Installation Items consisting of:–	AT29604/–	
Power lead assembly	AT36440	
Cradle assembly	AT12405	Standard mounting (AT29604/01 and /02 only)
Loudspeaker assembly	AT10877/02	AT29604/01 and /03 only
Cradle assembly	AT13723	
Clamping plate, 2 off	BT20167	
Bezel	BT36533	fascia mounting
Bracket, 2 off	FB00673	(AT29604/03 and /04 only)
Bagged Items consisting of:–	AT29610	
Hole plugs, 4 off	BT37521	radiotelephone case
Nut, hex, M4, 2 off	QA11607/X	bracket to cradle assembly
Washers, M4	QA15007/X	2/bracket to cradle assembly 2/clamping plate to cradle assembly
Screws, hex, slot, M4 × 6, 2 off	QJ13276/X	2/clamping plate to cradle assembly
Screws, 'Pozi' pan, M4 × 8, 2 off	QJ11917/X	2/bracket cradle assembly
Bagged Items consisting of:–	AT29605	all versions
Extractor tool	BT29007	cradle
3-way connector block	BT30081	
Information label	BT37436	call sign
10A fuse	FF99007	
Fuseholder	FH02839	
Plug, BNC, straight, 50Ω	FP99100	1/antenna feeder
Tyraps	QA04424	as required
Screws, pan, slot, S/T, No. 10 × ½	QQ41208/X	2/loudspeaker, 4/cradle
Screws, pan, slot, S/T, No. 6 × ¾	QW41212/X	2/fuseholder, 2/connector block
Microphone Installation Items consisting of:–	AT85791	ordered separately
Strain relief clamp	BT16043	microphone lead
Support	BT26617	Strain relief clamp
Microphone rest assembly	276661	
Screws, 'Pozi', pan, No. 6 × 12,5 mm	QJ07663/X	2/strain relief clamp support
Screws, slot, pan, S/T, No. 6 × ⅜	QW41206/X	2/microphone rest

INSTALLATION

Equipment Required

Hexagonal Wrench – M3
Circle cutter, holesaw, or socket punch
Drills (see sizes below)
Power Drill for drilling mounting holes
Soldering Iron
'Pozidriv' and flat-blade screwdrivers for mounting screws

Drill sizes:–

Drill for No. 6 self-tapping screw – 2,8 mm
Drill for No. 10 self-tapping screw – 3,4 mm

Notes:
1. The item to be fitted can be used as a marking-out template.
2. Cables should be routed away from areas of extreme heat and possible battery acid leakage. Wherever possible, existing holes in the bulkhead should be used. If metalwork has to be drilled, ensure that the new holes are fitted with grommets.
3. Details of the screws required to secure the installation items are shown in the Contents List.
4. Refer to Basic Installation Diagram Fig. 2.2 throughout this procedure.

> **CAUTION**
>
> To prevent interference with any other electronic systems in the vehicle, e.g. ignition, anti-skid devices etc., the radiotelephone and antenna should be mounted as far away as possible from these units and their associated cables. Reference should be made to the vehicle manufacturers handbook for the location of these items.

Procedure

1. Check package against Contents List above.

2. Determine location of installation.

   Note: Ensure that the location of the cradle assembly is compatible with safety of the vehicle occupants, ease of equipment extraction and ease of equipment operation when seat belts (if fitted) are worn.

   Avoid mounting in line with air flow from heater or air-conditioning vents.

   Avoid mounting in small enclosed spaces (e.g. glove lockers), especially of the unit is to be used frequently, or for long periods in the transmit condition.

   To prevent excessive self-heating, the unit should have an unobstructed airflow space of at least 20 mm from the rear and any two of the remaining four sides.

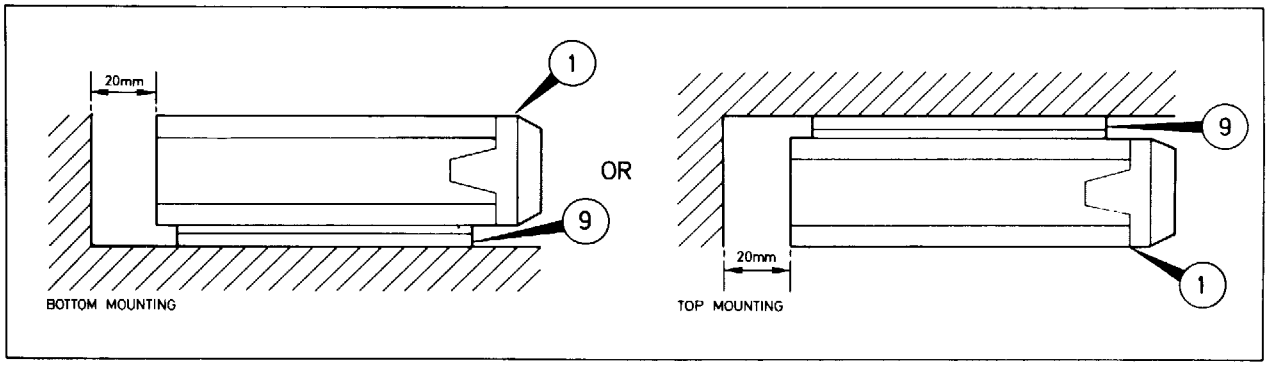

When finalising the locations of the items to be installed the lengths of the following cables should be noted:

Power leads	–	170 mm
Antenna flying lead	–	210 mm
Microphone flying lead	–	250 mm
Loudspeaker Lead (attached to radiotelephone)	–	170 mm
Loudspeaker Lead (attached to loudspeaker)	–	1000 mm

3. **Standard Mounting** – Remove cradle assembly using the extractor tool supplied with the bagged items.

   Note: **The equipment is supplied with the carrier plate fitted to the top side of the outer casing. To reverse the location, remove the four screws securing the rear panel to the case. Next remove the front panel by releasing the screw fixing on each side. Withdraw the chassis and turn it through 180°. Refit chassis, and both front and rear panels.**

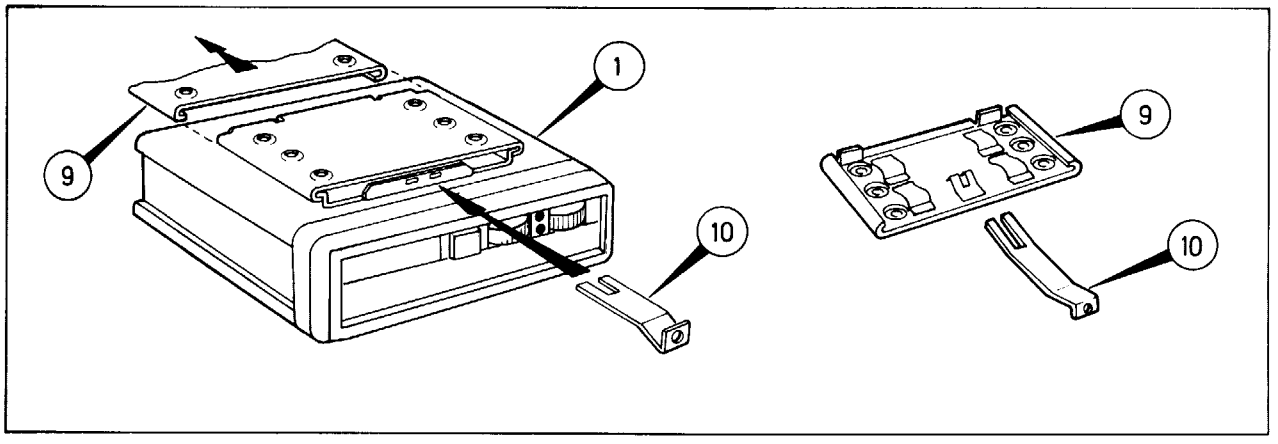

4. Standard Mounting – Install cradle assembly (locating spring to front), loudspeaker, microphone rest, and strain relief clamp.

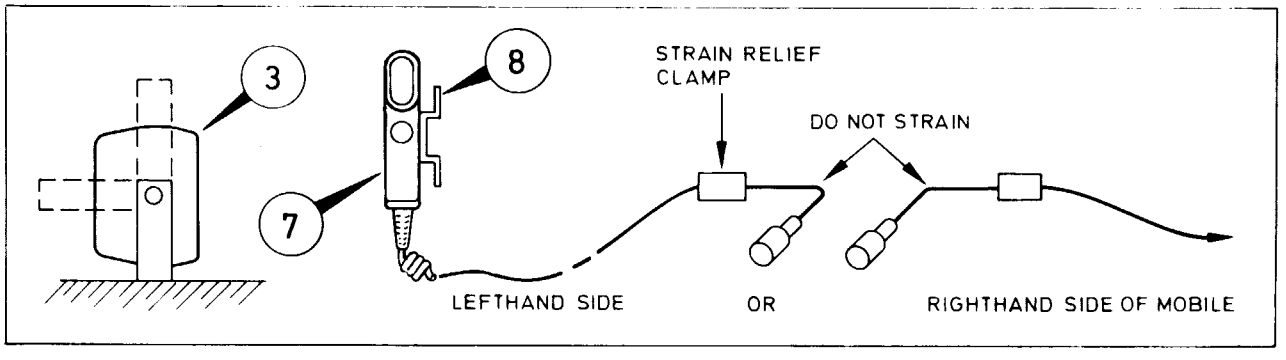

If required to mount the equipment on a ledge or shelf having a lip along its leading edge, the equipment cradle can be mounted on a locally manufactured wooden block, details of which are shown. This arrangement facilitates easy extraction of the equipment.

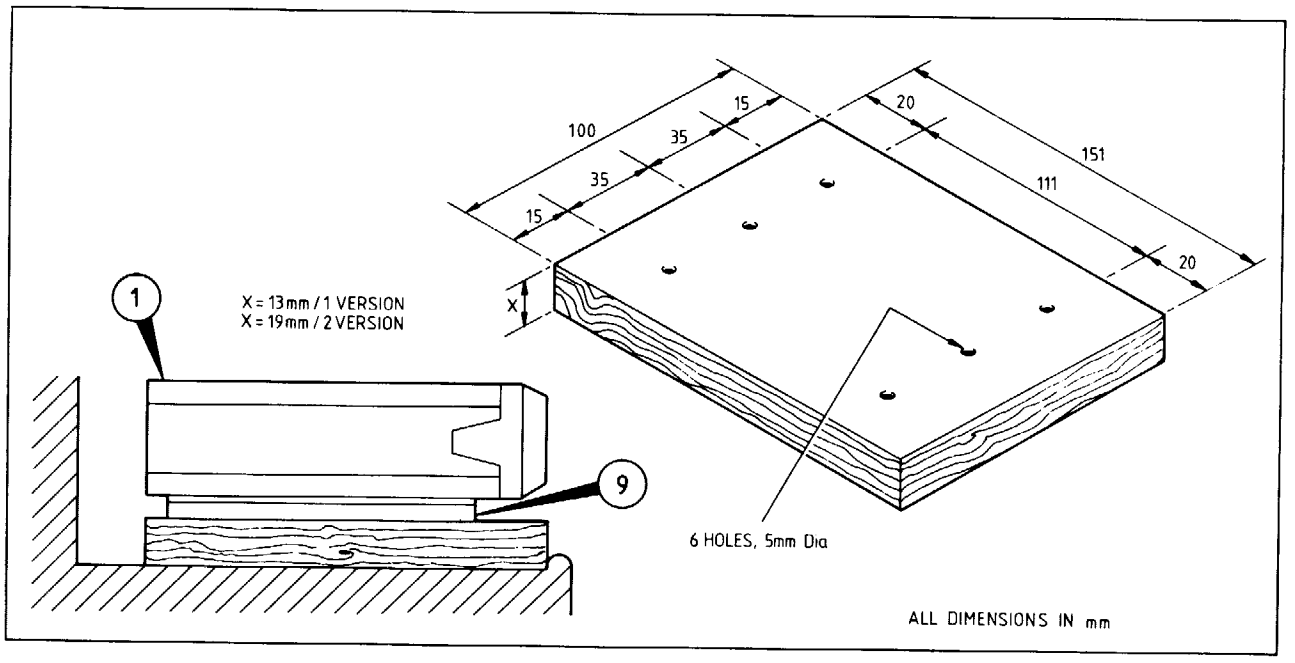

5. **Fascia Mounting** – Install loudspeaker, microphone rest and strain relief clamp. Install fascia mounting cradle assembly as follows:–

Notes:
1. Before commencing the installation, ensure that there is adequate clearance (ie at least 180 mm) behind the fascia for the radiotelephone and its flying leads. (See also paragraphs 2 of 'Procedure' in this section).
2. To facilitate installation, the cradle assembly (20) is designed such that it may be installed in the fascia aperture to provide either a top mounting or bottom mounting for the radiotelephone.
3. Two self-tapping screws and washers (not supplied) are required to secure the support brackets (21) to the vehicle. Where possible, existing fixing points and their fasteners may be used.
4. Equipments supplied for standard mounting can be easily converted for fascia mounting by releasing the four screws securing the carrier plate to the case assembly, removing the carrier plate and proceeding as detailed below using the fascia mounting installation items (ordered separately).

(i) If a suitable aperture is not provided, cut a hole size exactly 180 mm × 52 mm in the vehicle fascia.

(ii) Insert the cradle assembly (20) into the fascia aperture and loosely fit the clamping plates (19) to he cradle assembly (20). Position the clamping plates (19) so that the cradle assembly (20) is firmly held in position and tighten the M4 screw securing each clamping plate (19) to the cradle assembly (20).

(iii) Attach the support brackets (21) to the cradle assembly (20) with the M4 fixings supplied, ensuring that the screw heads locate in the appropriate recess in the cradle assembly (20).

Note: In very confined spaces, it may be more convenient to attach the support brackets (21) to the cradle assembly (20) before inserting it into the fascia aperture.

Bend the support brackets (21) where necessary and secure to a suitable position on the vehicle to form a rigid structure.

(iv) Plug the four holes in the transmitter/receiver case using the four hole plugs (23) supplied. Remove the radiotelephone front panel by releasing the screw fixing on each side. Fit the bezel (22) supplied, ensuring that the recessed side of the bezel (22) corresponds to the lipped flange side of the front panel and replace the front panel.

(v) Slide the transmitter/receiver (1) into the cradle assembly (20) until it locks in position. To release the transmitter/receiver (1), fully insert the extractor tool (10) in the side slot (as shown) to release the retaining springs, pull the extractor tool (10) to release the equipment and then pull the equipment out of the cradle assembly (20).

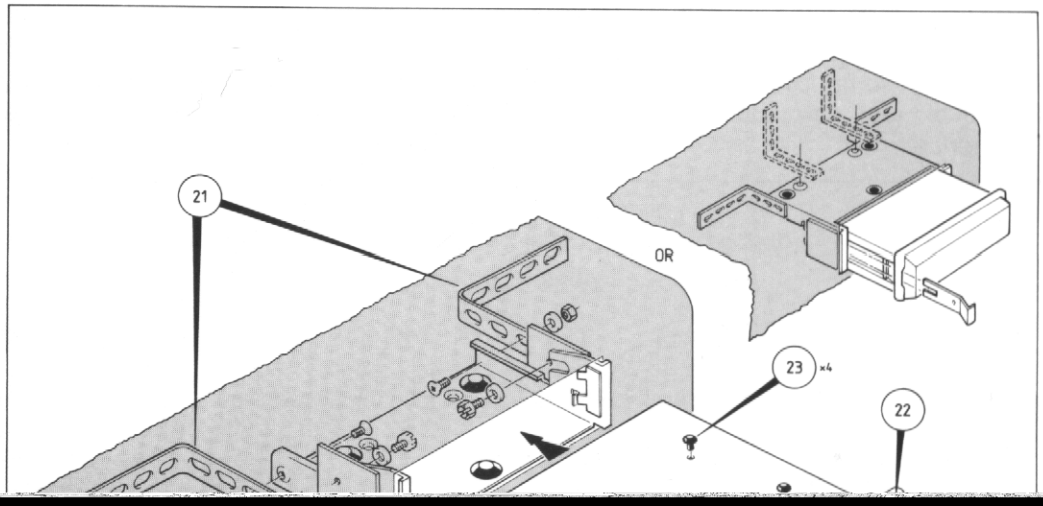

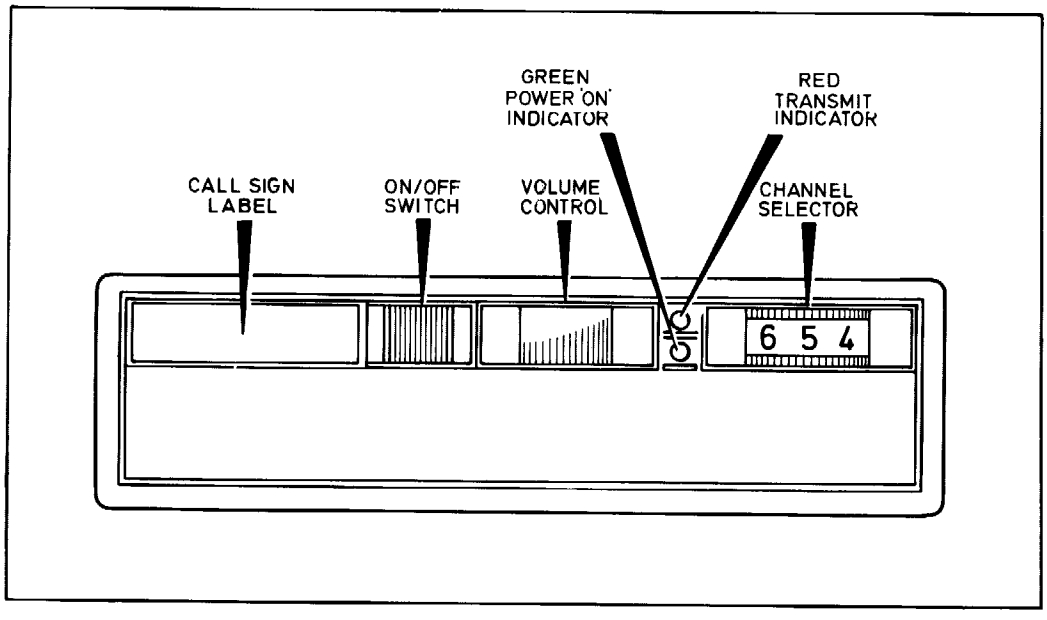

Controls

All controls, with the exception of the press-to-talk switch on the fist microphone, are located on the front panel of the transmitter-receiver. Reading from left to right, these controls are:–

(a) Off/On switch – this push-button switch makes or breaks the power supply to the radiotelephone.

(b) Volume control – adjusts the speech level at the loudspeaker, volume increases as control is moved from left to right.

(c) Channel selector (when fitted) – selects required channel.

Indicators

(a) Filament lamp – Provides a green point of light. With equipment switched on, this lamp diffuses light, via a light pipe, through graphics and edge-lights volume and on/off controls. It also illuminates channel numbers when fitted.

(b) Tx On – Provides red point of light when press-to-talk switch is operated.

Reception

(a) Press the Off/On button. Check that the green point of light appears.

(b) Select the required channel by rotating the channel switch until the required number appears at the centre of the window.

(c) Set volume control to mid-position. On receipt of a call, adjust control for suitable listening level.

Transmission

Note: As a precaution against the inadvertent jamming of a channel, certain types of microphone are equipped with a timing device which automatically switches off the transmitter between 30 and 60 seconds after operation of the 'press-to-talk' switch. If the transmission is likely to exceed this time period the period may be extended, with virtually no interruption of the message, by pausing briefly to release and re-operate the 'press-to-talk' switch before the time period has elapsed.

(a) To avoid interfering with other users of the operating channel, first listen out to ensure that no transmissions are being made.

(b) Opérate the press-to-talk switch; check that the red Tx On indicator is lit.

(c) Holding the microphone one or two inches from the lips, speak clearly across its top in a normal conversational tone.

(d) Use correct operating procedure and keep transmissions short. Release press-to-talk switch as soon as the message is finished. Check Tx On indicator is extinguished.

(e) Return the microphone to its rest.

Switching Off

To switch off the set, press the Off/On switch once and check that the On lamp is extinguished.

SECTION 3

TECHNICAL DESCRIPTION

RECEIVER CIRCUIT SUMMARY

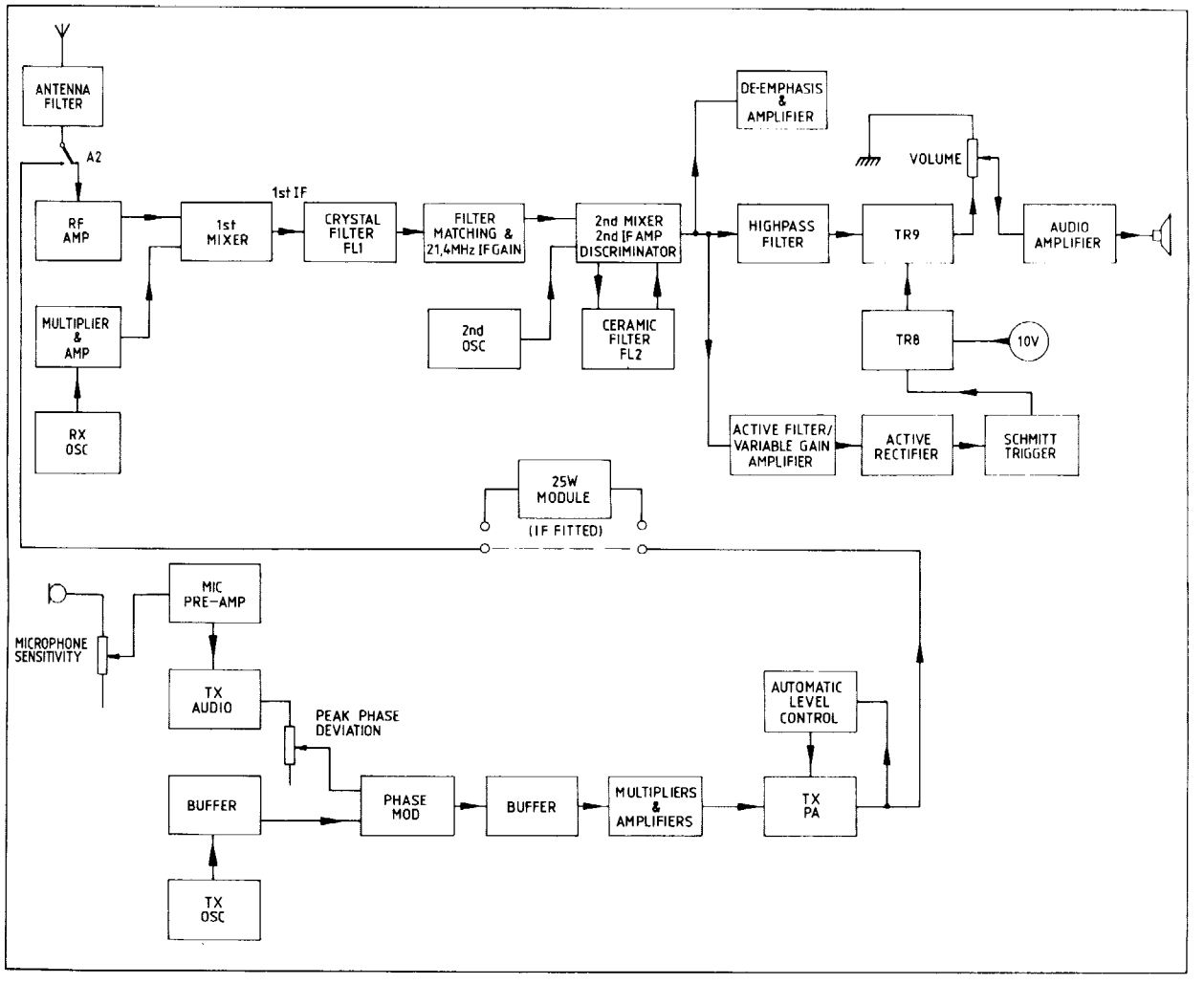

Fig. 3.1 Block Diagram – Transmitter/Receiver

Received signals are routed from the antenna via the antenna filter and contact A2 of the un-energised changeover relay RLA/2 to the two-stage RF filter and thence to the RF amplifier. A further three-stage RF filter follows, which, together with the first RF filters, provides RF selectivity. The amplified RF signal is applied to the 1st mixer stage.

The injection frequency is provided by an oscillator the output of which is multiplied, amplified and applied to the 1st mixer, where it is mixed with the RF signal to produce the 1st IF of 21,4 MHz. The IF is applied to a crystal filter the output of which is matched by an emitter-follower buffer stage and applied to a common emitter voltage amplifier which matches the signal to IC1, comprising the 2nd mixer, 2nd IF amplifier and discriminator. The output from the crystal controlled 2nd oscillator stage is applied to the 2nd mixer in IC1 where it is mixed with the 1st IF signal to produce a second IF of 455 kHz. This signal is passed via the 2nd IF amplifier (in IC1) and ceramic filter (FL2) to the discriminator, the audio output of which is fed to:–

(a) a de-emphasis network, amplifier and high-pass filter. The resultant AF signal is passed via the volume control to an integrated circuit audio output amplifier which delivers either 3W into a 3Ω load or, 6W into a 1,6Ω load (eg two 3Ω loudspeakers in parallel).

(b) The squelch circuit, comprising squelch filter amplifier, active rectifier and schmitt trigger stages, which in the absence of an acceptable signal level mutes the audio output. The level at which this muting occurs is determined by the pre-set squelch control.

TRANSMITTER CIRCUIT SUMMARY

Audio signals from the microphone are fed via the sensitivity control to a pre-amplifier stage and thence to a pre-emphasis amplifier. After clipping and de-emphasis, the AF signal is filtered, amplified and applied to the phase modulator via the peak deviation control.

The carrier frequency, produced by the transmitter oscillator stage, is applied to the phase modulator where it is phase modulated by the AF signal. The phase modulator is isolated by buffer stages at its input and output, resulting in very low level modulation distortion.

After modulation the signal is frequency multiplied in five doubler stages before being passed via the driver amplifier to the PA stages. The RF signal is fed via the 25W PA Module, if fitted, and contact A2 of the energised changeover relay RLA/2 to the antenna filter and antenna.

An automatic level control (ALC) circuit is incorporated which maintains the output at a substantially constant level with fluctuations of voltage and temperature. Power output with 25W PA Module not fitted is nominally 6W into a 50Ω load, but this can be continually adjusted down to 1W. With the 25W PA Module fitted, the 6W output can be increased to 25W which can be continuously adjusted down to 10W.

POWER DISTRIBUTION AND SWITCHING

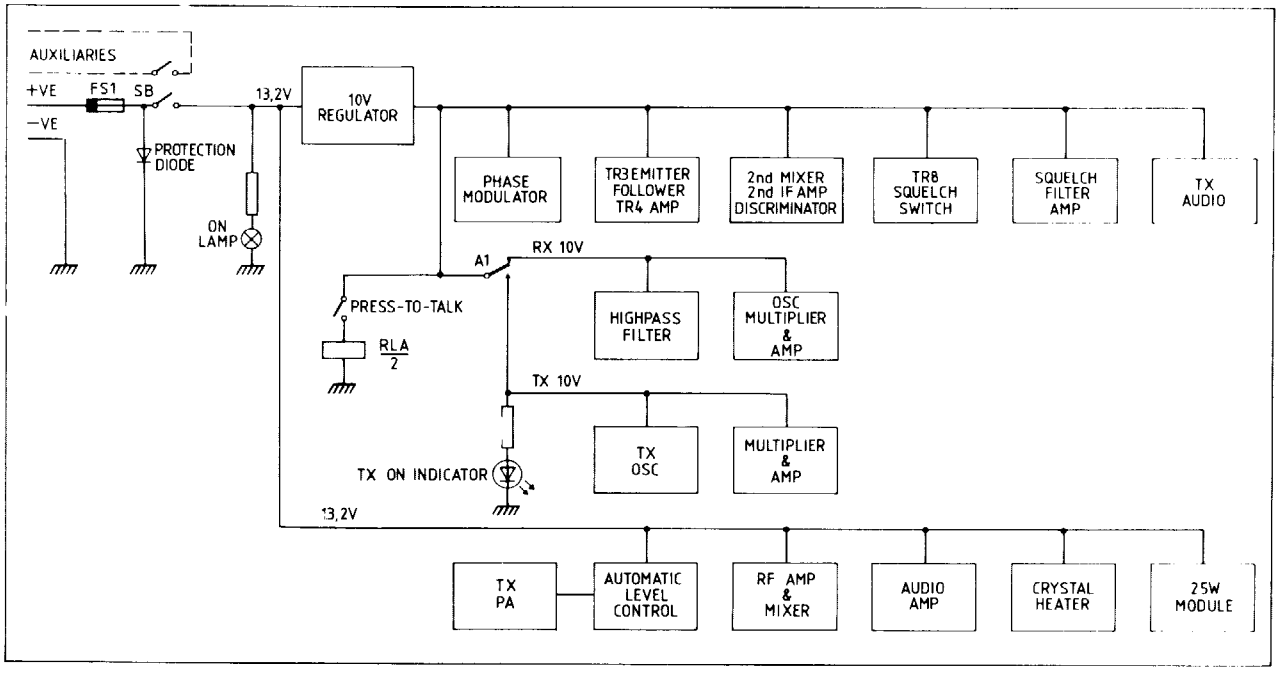

Fig. 3.2 Power Supplies and Switching Block Diagram

Power Supplies

The battery 13,2V positive supply is fed via a feedthrough capacitor and a ferrite bead to the 10A fuse FS1 and one pole of the Off/On switch (SB). A shunt diode is incorporated as protection against reverse polarity. The spare pole of the Off/On switch may be used for switching ancillaries such as the Voltage Converter Type VC290.

A regulator circuit provides 10V and, via changeover relay contact A1, the switched 10V supplies to the appropriate stages as shown in Fig. 3.2 the Power Distribution and Switching block diagram.

Receive Switching

Setting the Off/On switch (SB) to 'On' completes the positive line to the 10V regulator. With the exception of the transmitter oscillator, multiplier and amplifier stages, all stages in the equipment are now supplied with either 13,2V or 10V according to their requirements; the 'on' indicator lamp (LP1) provides a point of green light and also illuminates the transmitter/receiver controls and labels. The equipment is in the receive condition.

Transmit Switching

Operation of the press-to-talk switch completes the 10V supply to energise relay RLA/2. Contact A1 transfers the 10V supply from Rx 10V line to the Tx 10V line supplying; the transmitter oscillators, transmitter multipliers and amplifiers and the 'transmit' indicator (LED 1), which provides a point of red light. Contact A2 transfers the antenna filter from the receiver RF amplifier stage to the transmitter PA output.

DETAILED CIRCUIT DESCRIPTION

Receiver

RF signals at the antenna are routed via the antenna filter and un-energised changeover relay contact A2 to an RF filter, formed by L1 and L2. The output of the single-stage common collector RF amplifier TR1 is applied to a further stage of filtering comprising three helical resonators L3, L4 and L5. These three, together with the initial two, provide the RF selectivity. The amplified RF signal is applied to the 1st mixer stage, TR2.

The receiver oscillator, a modified Colpitts type, employs a series resonant third overtone crystal, the exact frequency of oscillation being set by the trimmer L9–L14, as appropriate (see also "Netting Procedure", in Section 2). When the ±5ppm frequency stability option is exercised, crystal stability at low temperatures is achieved by the use of self-regulating resistors, known as pozistors. These are positioned adjacent to the crystals and kept in thermal contact with them by means of an insulating plastic cover.

The receiver oscillator load, L15, C41 is tuned to the second harmonic which is applied to the second frequency doubler stage TR12. The second harmonic is selected by L17, C48 and passed to the base of TR13, a further doubler stage, the output of which is filtered by L18, L19 and applied to the base of amplifier stage TR14. The amplified signal is filtered by L20, L21 to provide the injection frequency, which is fed to the gate of the 1st mixer stage TR2, a dual-gate MOSFET. The filter stages L18, L19 and L20, L21 provide high selectivity of the injection signal against harmonics of the crystal.

The signal frequency and injection frequency are applied to the 1st mixer stage and the resultant output signal is tuned by L7, C7 to provide the 1st IF at 21,4 MHz. This signal is applied to an 8-pole crystal filter FL1, which provides the majority of the adjacent channel rejection and determines the receiver selectivity.

The filtered IF signal (21,4 MHz) is matched by emitter follower stage TR3 to the first IF amplifier TR4, the output of which is passed to pin 16 IC1. This integrated circuit incorporates the 2nd mixer, 2nd IF amplifier and discriminator stages. The crystal controlled 2nd oscillator provides a second injection frequency which is applied via pin 1 of IC1 to the 2nd mixer. Mixing action produces the 2nd IF of 455 kHz, at pin 3 of IC1 which is filtered by the 455 kHz ceramic filter FL2, reducing noise bandwidth and improving adjacent channel rejection. The filtered IF signal (455 kHz) is applied to the 2nd IF amplifier (in IC1) and thence to the discriminator. External components L8 and C20 comprise the discriminator tuned circuit. Audio output from the discriminator is fed from IC1 pin 9 and routed to the audio amplifier and also to the squelch circuit.

The audio signal, from the discriminator in IC1, is de-emphasised by R23, C22, C23 and applied to variable gain stage TR5, TR6, the gain of which is determined by the setting of RV1. This porvides a steady audio output both to tone options, when fitted, and the audio amplifier IC2. The amplified AF signal at RV1 is fed to TR7 which, together with its associated components, form an active high-pass filter to reduce low frequency noise. The audio is gated by emitter follower TR9 and routed via the tone option, if fitted, and link to the Volume control RV2, for application to the audio amplifier, IC2. This integrated circuit is a short-circuit-proof thermally protected amplifier capable of delivering in excess of 3W into a 3Ω load, or alternatively 6W into a 1,6Ω load (eg two 3Ω loudspeakers connected in parallel). Pin 2 of IC2 is connected to the TX 10V line via R35 in order to mute the amplifier during transmissions. TR10 is provided as a Busy lamp drive stage for use with tone options.

Squelch

Under no-signal conditions IC1 output consists substantially of noise which is applied to the active filter stage TR16, where a band lying above 15 kHz is extracted. The filtered noise is then applied to a temperature compensated amplifier TR17, the gain of which is set by the pre-set squelch control, RV3. After amplification, the noise signal is passed to the active rectifier IC3, the limiting characteristic of which cuts off frequency components in excess of 25 kHz. Due to the disposition of D6 and D7, amplification is much greater on the positive-going half cycles of input signal than it is on the negative. IC3 thus behaves as rectifier, the output of which is smoothed by R95, C75 and applied to Schmitt trigger TR18, TR19. With TR18 in conduction, TR19 is switched off; this in turn switches off TR8 and TR9 thus breaking the audio path.

Transmitter

Audio signals from the microphone are applied via the microphone gain control RV4 to the microphone pre-amplifier TR20; the prime function of this stage being to mute the microphone during transmissions of in-band audio signalling tones, when such options are fitted. The tone circuits are arranged so that the bias on TR20 is removed, thus inhibiting the stage.

The audio is passed to a 2-stage pre-emphasis amplifier TR21, TR22 which has a 6dB/octave slope. R111 is a 'select-on-test' component whose value is chosen for optimum symmetry. D9 and D10 form a diode limiter circuit, followed by de-emphasis components R122 and C94. A 2-stage active low-pass filter TR23, TR24 removes unwanted high frequency components prior to the signal being matched into the phase modulator by the emitter-follower TR25 and the peak phase deviation control RV5.

The oscillator TR26 is crystal controlled and operates in the fundamental series resonant mode, the exact frequency of oscillation being set by the trimmer L22–L27, as appropriate (see also "Netting Procedure" in Section 2). When the ±5ppm frequency stability option is exercised, crystal stability at low temperatures is achieved by the use of self-regulating resistors, known as pozistors. These are positioned adjacent to the crystals and kept in thermal contact with them by means of an insulating plastic cover.

The RF output from the oscillator stage TR26 is buffered by TR27 and applied to the phase modulator, TR28. The signal at TR28 collector is the phasor sum of the direct component, fed forward via C119, and a component amplified by TR28; the latter signal being amplitude modulated by the AF signal. The resultant phase modulated output is fed to a clipping buffer stage TR29, which removes the amplitude modulation. TR30 and TR31 are FET frequency doublers, each stage contributing some gain. The high output impedance of FETs allow untapped coils to be used in the drain tuned circuits of these stages. A further chain of doublers using bipolar transistors, TR32, TR33 and TR34 bring the RF signal up to final frequency; total multiplication being thirty-two.

The RF signal, at final frequency, is routed via the driver amplifier stage TR35 to the PA stages formed by amplifier stages TR36, TR38 and TR40. The output signal is fed via the 25W PA Module, if fitted, and relay contact A2 to the antenna harmonic filter (which reduces unwanted outputs to less than 0,25μW).

Automatic Level Control

The purpose of this circuit is to maintain the PA output substantially constant, despite fluctuations in drive level supply voltage and temperature, by maintaining a constant current supply to TR40.

R184 samples the current drawn by the PA, thus producing a voltage drop which is added to a portion of the voltage across D11 and D12, determined by the setting of RV6. The resultant voltage sum is applied to TR39 base, controlling the degree to which TR39 conducts and consequently the amount of current shunted from TR37 base. Therefore, if the PA current tends to rise, TR37 reduces the supply voltage to TR36 and TR38 thus reducing the PA drive.

The power output can be adjusted, by means of RV6, to any level up to 6W (25W PA Module not fitted). or 25W (25W PA Module fitted).

10V Regulator

This circuit consists of series limiter TR43 controlled by TR41 and TR42. Short-circuit protection is provided by D14.

The regulated output voltage is sampled by TR41 and compared with the reference voltage (8V), determined by zener diode D13. Any change in the output voltage develops an error signal between TR42 base and emitter which is applied to the base of TR43 causing the volt-drop to vary in such a manner as to restore the output voltage at the collector of the power transistor TR43 to normal (9,8V – 10,2V depending on the value of 'select-on-test' resistor R186).

R189 ensures that the regulator starts under all normal conditions.

In the event of a short-circuit being present, D14 together with TR42 switch off TR43 thus protecting the regulator, which resumes normal operation when the short-circuit is removed.

25W UHF PA Module AT28585

This module enables the nominal 6W output from the transmitter PA stages to be increased to provide a maximum output of 25W into a 50Ω load. If required, this can be continuously adjusted down to 10W by the setting of RV6 in the automatic level control circuit.

The RF output from the final PA stage, TR40, is applied to the module and matched by L300, C302 and C303 to the base of the single-stage common emitter power amplifier TR300. The resultant output is filtered and matched to the antenna filter via contact A2.

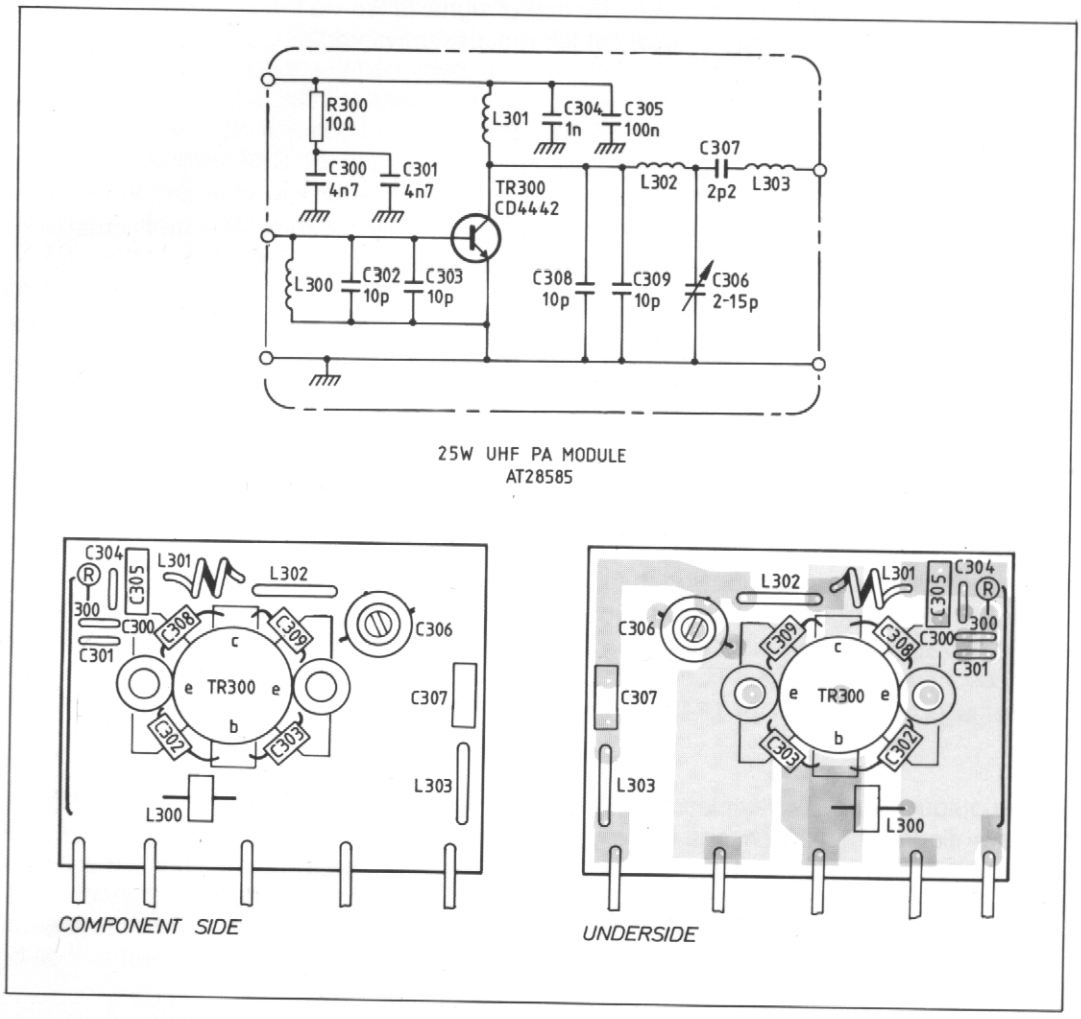

Transmission Timer AT28598

The transmission timer is an electronic switch, the purpose of which is to limit transmissions to a time determined by the time constant of R2, C1. The module is contained within the fist microphone and is connected electrically in series with the 10V supply to the antenna changeover relay.

When the press-to-talk switch is operated, the 10V supply is applied to TR1 emitter and also, via R3, to the base of TR2. TR2 conducts and the resultant fall in its collector potential is applied to the base of TR1. TR1 conducts and the switched 10V supply is applied to the relay coil.

Simultaneously, C1 charges via R2 until the potential on the base of TR3 is high enough to cause TR3 to conduct. The subsequent fall in collector potential switches off TR2 and hence TR1, to inhibit the 10V supply to the relay. C1 is discharged when the press-to-talk switch is released.

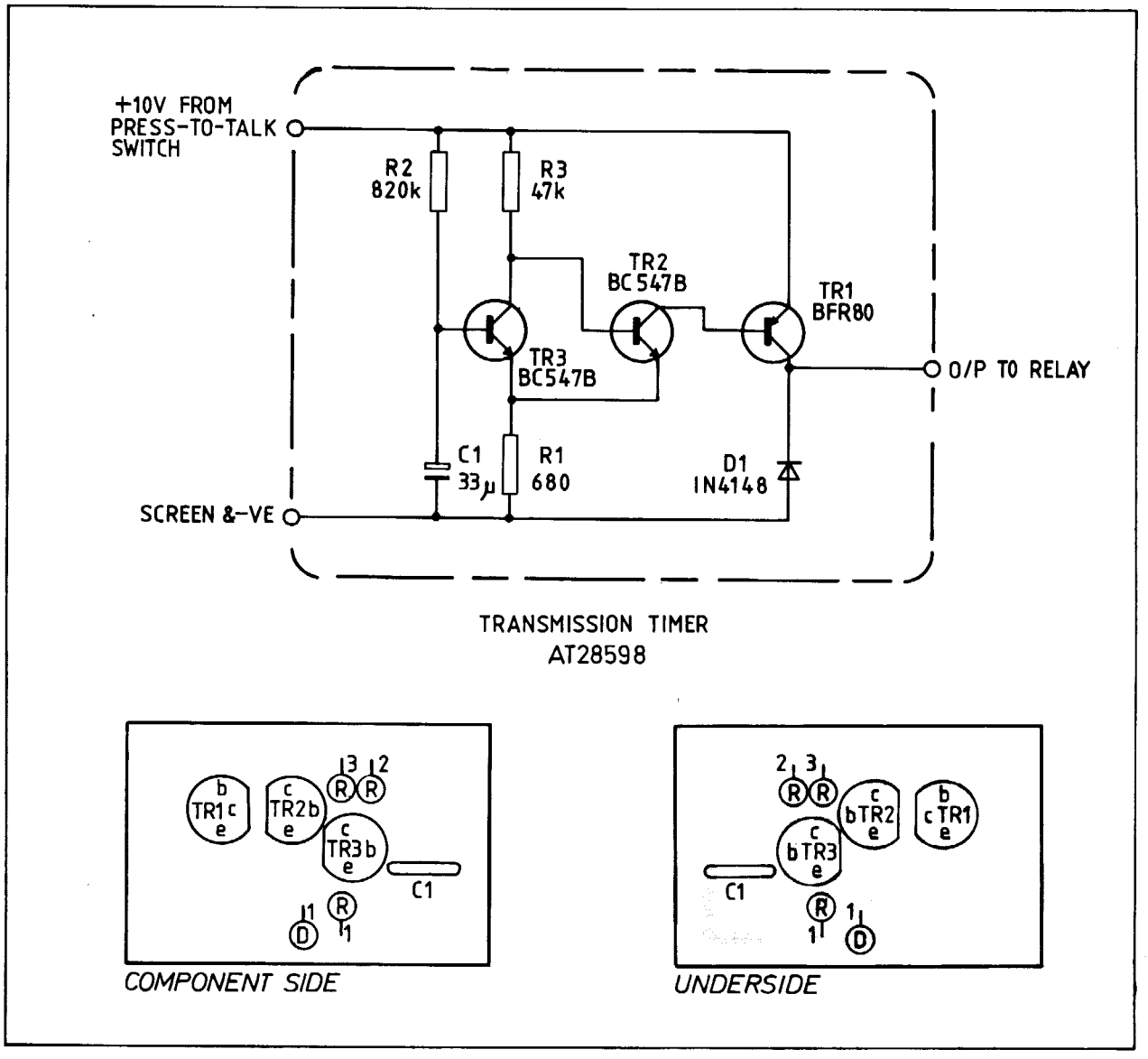

SECTION 4

SERVICING

PRECAUTIONS AND GENERAL INFORMATION

Routine Frequency Adjustments

This equipment uses quartz crystal control of its channel frequencies. Whilst this is extremely reliable and accurate, it is important to realise that crystals 'age' slightly and require periodic re-adjustment. The netting procedure (see Section 2) must be carried out as a matter of routine at least twice a year. The requirement for this adjustment is independent of equipment usage since the 'aging' effect occurs even during careful storage, and is greater when the equipment is new.

'Pozidriv' Screws

Only the correct size of 'pozidriv' screwdriver should be used to release or tighten any of this type of screw found in this equipment. The use of any other screwdriver type can result in severe damage to the screwhead.

Replacement of Wire-ended Components

When replacing wire-ended components, ensure that the wires do not protrude more than 1mm beyond the track surface. Failure to do this may result in short-circuiting the component to the casing.

Soldering

Soldering operations should be kept to a minimum.
Ensure that the supply is disconnected before soldering.
Printed circuit tracks should be clean before applying solder and soldering iron dwell time should be kept to the minimum required to make a suitable joint.

Always check that the hole in the printed circuit track is clear of solder before fitting a component.

Wherever possible, a low-voltage DC soldering iron should be used, with an earthed bit. This type of soldering iron must be used when replacing a field-effect transistor.

When soldering wire ends into plated-through holes, ensure that the solder flows through the hole to emerge on the other side of the board.

Printed Circuits

Take particular care not to bend the printed circuit board when removing or replacing it, or when working on it. Bending can cause hairline breaks in the printed circuit track, such breaks being very difficult to locate. Do not connect test leads to a printed circuit track.

Fault-Finding – Integrated Circuit (IC's)

Should an IC failure be suspected, all associated external components must be checked, thus preventing the original cause of failure from damaging the replacement item.

Test Points(TP's)

Test points take the form of Berg pins, whose locations are silk screened on the component side of the board. It is recommended that a suitable connector and lead is locally made to fit the pins, as shown in the diagram below:–

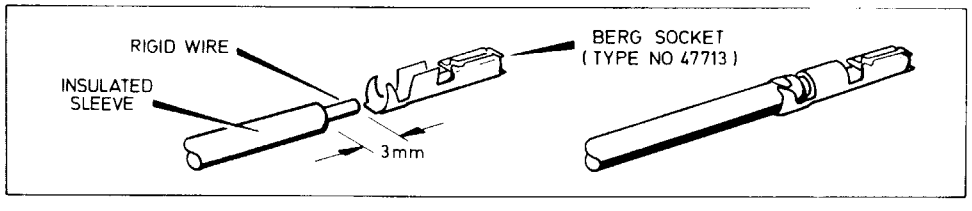

Measuring Points (MPs)

Measuring points give an indication of equipment performance at these points when specified levels of RF or AF are injected at stated locations. The locations of MP's are shown on the circuit diagram. Test equipment required to measure the levels quoted is included in the list shown under "Test Equipment Required".

CONSTRUCTION

All transmitter and receiver circuits with the exception of the 25W module are accommodated on a single printed wire board, secured by means of lugs and screws to an aluminium block, which serves both as a rear panel and as a heatsink for the transmitter PA transistor TR36. The rear panel is also fitted with a row of nine feedthrough capacitors, which connects to the equipment by means of flying leads entering via rear panel holes. For power outputs in excess of 6W a separate board is provided. This board is secured to a screen running parallel to the rear panel.

Operator controls are carried on the leading edge of the PWB together with the red Tx On indicator, and the filament lamp, whose light is diffused via a light pipe over the controls and front panel legend. A green lens accommodated on the moulded front panel provides a green point of light when the equipment is switched on.

The case is extruded aluminium, with two pairs of parallel grooves provided on its inner side surfaces. One pair of grooves accommodates the PWB, while the other pair accommodate signalling option modules. The front cover is a tough plastic moulding, internally metallised to give electrical shielding.

Options are supplied complete with front panel escutcheons and are automatically connected to the transmitter-receiver when slid into the grooves and secured by one screw at each side.

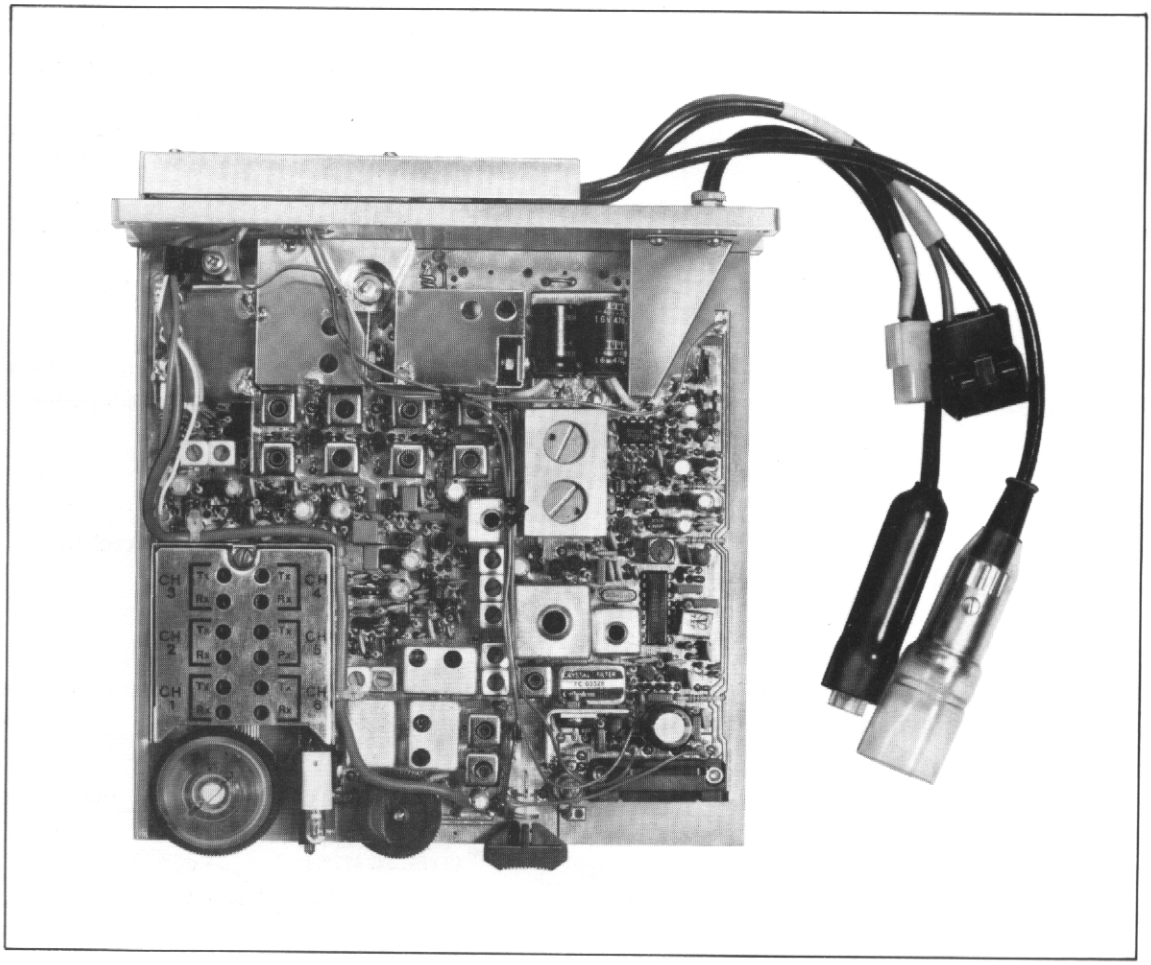

EQUIPMENT ACCESS

Tools Required

'Pozidriv' screwdriver.

Remove the four 'pozidriv' screws securing the rear panel to the equipment case. The rear panel and PWB are now simply withdrawn for complete access.

CRYSTAL INFORMATION

Receiver

Band	Carrier Frequency fc (MHz)	Crystal Frequency fx (MHz)	Crystal Range (MHz)	Crystal Spec.
T1	405–440	$\frac{fc + 21,4}{8}$	53,3 – 57,675	T84RX
UO	440 – 470	$\frac{fc - 21,4}{8}$	52,325 – 56,075	T84RX

Transmitter

Band	Carrier Frequency fc (MHz)	Crystal Frequency fx (MHz)	Crystal Range (MHz)	Crystal Spec.
T1	405 – 440	$\frac{fc}{32}$	12,656 – 13,75	T92RX
UO	440 – 470	$\frac{fc}{32}$	13,75 – 14,6875	T92RX

Note: Specifications apply to the UK only, information for other areas being provided on request. Failure to fit the crystals specified for an area may infringe type approval regulations and/or temperature environmental requirements.

TEST EQUIPMENT

The following is a list of test equipment recommended for the alignment, fault location and repair of the M296. Equivalent types may be used, provided that due corrections are made for any differences in characteristics, particularly with reference to input and output impedances. It must be stressed, however, that satisfactory performance may not be obtained unless the correct type of test equipment is used.

Power Supply	8 – 16V, 10A	Kingshill 18VC10
RF Output Meter	50Ω, 50W 405 – 470 MHz	Termaline 6154
Multimeter	20,000Ω/volt	AV08 or Pye TM1A*
Diode probe	10kΩ	Locally manufactured, see Fig. 4.1 below. Not required if Pye TM1A is used.
Marker oscillator	10,7 MHz	Pye PT507 (use 2nd harmonic)

RF signal generator	FM, UHF	Hewlett-Packard 8640B
Trimming tools		AT00007
AF signal generator	300Hz – 20kHz	Levell TG200FM
Modulation meter		Radiometer AFM2
T-attenuator	–40 dB signal sampler	Marconi signal sniffer 54452-011
Distortion analyser		Hewlett-Packard 333A. †
AF output meter		Marconi TF893A
AF millivoltmeter	Input impedance greater than 200 kΩ	Hewlett-Packard 3334
Frequency Counter	405–470 MHz	Included in Hewlett-Packard 8640B
Oscilloscope	General purpose	Gould Advance 0S1000A

*Note: If an AV08 or similar multimeter is used, it is recommended that a probe set such as those shown below be employed. All leads connected to such a probe should be as short as possible.

	Meter probes – Radiospares	Type 1 423–431 (Red and Black)
or	Meter probes – Radiospares	423–633 (Red) 423–649 (Black)

† An alternative distortion meter may be used. If its scale is not calibrated directly in dBs an equivalent reading may be obtained by remembering that 12 dB SINAD corresponds to 25% distortion.

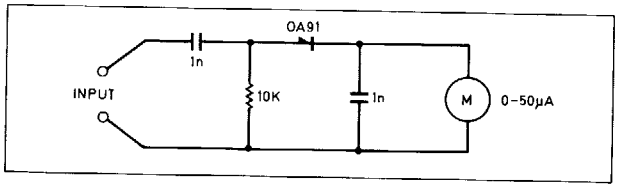

Fig. 4.1 Diode probe circuit diagram

ALIGNMENT PROCEDURES

Preamble

i) Unless stated otherwise, the following conditions obtain:–

a) All signal levels are expressed in PD RMS.
b) All test voltage readings are expressed with respect to negative.
c) All tests are taken with power supply set to 13,2V DC.
d) Receiver output load is 3Ω, provided by either a loudspeaker or the AF output meter.
e) All receiver measurements are taken at zero beat.
f) The following alignment procedures refer to Issue 1 motherboards only.

ii) To avoid excessive heating and interference problems, the transmit time should be kept to the minimum required to make an adjustment and observe the reading.

iii) Connect the multimeter negative lead to the equipment rear panel, unless otherwise stated.

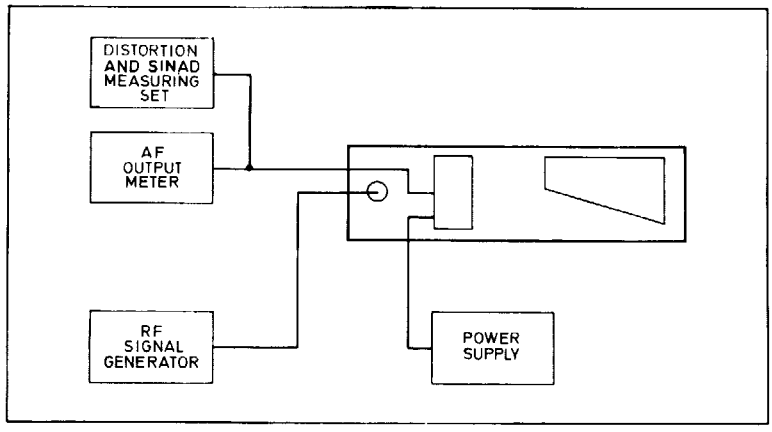

Fig. 4.2 Connection of Test Equipment – Receiver Testing

Voltage Checks

Check that the voltage on option pin H is 10V ±0,2V. If necessary, select R186 from the range of values 100Ω to 470Ω in order to obtain that figure.

Disconnect pozistor link R1/R2 or R1/R3.

Leakage Current

With transmitter-receiver switched off and multimeter connected in series with the supply, check that the current drawn is less than 1μA. Switch set on and check that green lamp lights.

RECEIVER ALIGNMENT

Preliminaries

1. Connect test equipment as shown in Fig. 4.2 above.
2. Select channel frequency closest to the centre frequency of the band covered. Set RF signal generator to this frequency, using the frequency counter. Disconnect counter.
3. Set cores of coils L15, L16, L17 flush with the tops of their formers.

Procedure

Carry out alignment as follows:–

STEP	TEST EQUIPMENT	TEST POINT	TUNE	ADJUSTMENT
A	AVO, set to 2,5V DC range	TP1	L15,L16 L17	Adjust for maximum Adjust for minimum
B	AVO, set to 10V DC range	TP2	L18,L19	Adjust for minimum
C	AVO, set to 2,5V DC range	TP3	L20,L21 L18,L19 L20,L21	Adjust for maximum Re-adjust for absolute maximum
D	Set RV1, RV3 fully counter-clockwise and set RF signal generator output to 100 mV unmodulated.			
E	Distortion Analyser	Rx Output	L1–L5	Tune in sequence for best quieting
F	Marker Oscillator	–	–	If necessary, adjust crystal oscillator for zero beat, but refer to 'NETTING PROCEDURE' in Section 2.

STEP	TEST EQUIPMENT	TEST POINT	TUNE	ADJUSTMENT
G	Modulate RF input signal 1 kHz at 60% peak deviation, output 1 mV.			
	Distortion Analyser	Rx Output	L8 L7	Tune for maximum output Tune for minimum distortion
H	AF Milli-voltmeter	Option pin E	RV1	Adjust for between 95 and 105 mV

RECEIVER PERFORMANCE CHECKS

SINAD

A	Distortion Analyser	Rx Output	–	Set RF input level to 0,35μV modulated as above. Check SINAD is greater than 12 dB. (See comment after 'TEST EQUIPMENT')

SQUELCH

A	Distortion Analyser	Rx Output	–	Reduce RF input level until 10 dB SINAD is obtained
			RV3	Adjust so that squelch is just open. Reduce input level by 6 dB and check that squelch is closed

DISTORTION AND SIGNAL-TO-NOISE

A	Reset signal generator output to 1 mV, modulated 60% at 1 kHz. Adjust volume control for 3W output power.			
B	AVO	–	–	Connect AVO in series with supply. Check that current drawn is less than 800 mA.
C	Distortion Analyser	Rx Output	–	Check distortion is less than 5%
D	Switch channel frequency by ±2,5 kHz:– 25 kHz channel spacing ±2,0 kHz:– 20 kHz channel spacing			
	Distortion Analyser	Rx Output	–	Check distortion remains less than 10% over the frequency excursion
	AF Output meter	Rx Output	–	Switch off modulation. Check signal-to-noise ratio is better than 50 dB

QUIESCENT CURRENT

A	Disconnect RF input			
B	AF output meter	Rx Output	–	Check output is less than 10μW
C	AVO	–	–	Check supply current lies between 250 and 375mA
D	AVO	Option pin J	–	Transfer AVO, set to volts range, to pin J. Check voltage is less than 0,5V DC

Disconnect all items of test equipment

TRANSMITTER ALIGNMENT

Note: The transmitter should always be suitably loaded at the antenna socket and keyed only for the time required to make an adjustment and to observe the readings.

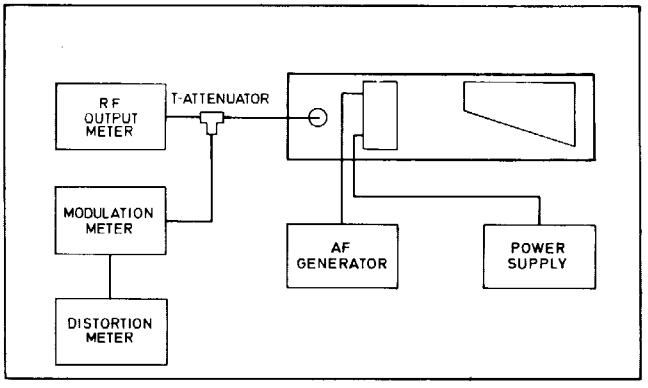

Fig. 4.3 Connection of Test Equipment – Transmitter Testing

Preliminaries

i) If the 25W UHF PA module is fitted disconnect its input and output leads from the motherboard and solder a link on the PWB underside in place of L56 prior to alignment.

ii) Set coils L30–L37 flush with the tops of their formers. Set C183 to half-mesh.

iii) Set RV4 to mid position
RV5 to mid position
RV6 to fully counter-clockwise

iv) Connect test equipment as shown in Fig. 4.3

v) Key tansmitter. Check that transmit lamp lights. Check also that the voltage on the Rx 10V line is less than 0,5V. Key transmitter off.

vi) Set channel selector switch to the frequency closest to the centre of the frequency band covered.

Procedure

Carry out alignment as follows:–

Note: When adjusting components in pairs, search one component relative to the other in order to obtain maximum readings.

STEP	TEST EQUIPMENT	TEST POINT	TUNE	ADJUSTMENT
A	AVO, set to 10V DC	TP4	L30,L31	Adjust for maximum
B	AVO, set to 2,5V DC	TP5	L32,L33 L34	Adjust for maximum Adjust for minimum
C	AVO, set to 2,5V DC	TP6	L35 L36	Adjust for maximum Adjust for minimum
D	AVO, set to 2,5V DC	TP7	L37 L39	Adjust for maximum Adjust for minimum

STEP	TEST EQUIPMENT	TEST POINT	TUNE	ADJUSTMENT
E	AVO, set to 10V DC	TP8	L39,L40 L42	Adjust for maximum Adjust for minimum
F	RF Output meter	–	L43,C165	Initially adjust for maximum supply current. When power begins to register on the output meter, tune for maximum output power
G	RF Output meter	–	C170 C183,C184 C193,C194	Adjust for maximum. Adjust in pairs for maximum output power. Check that output is greater than 6W. Switch to unit bandwidth extremes. Check that power output does not fall by more than 0,5 dB
			L39,L40	Re-adjust if required
H	RF Output meter	–	RV6	Check that power output can be smoothly reduced to 1W

25W UHF PA Module Not Fitted

6 Watt Unit

J	Apply AF signal at 1 kHz RF output meter	–	RV6	Increase RV6 slowly to 6W output Check no instability is present
	Re-adjust C193 for maximum and RV6 for 6W output			
	Ammeter	–	–	Check supply current is less than 2,5A
K	RF Output meter	–	–	Reduce power supply to 10,8V. Check power output is greater than 3,5W
				Increase power supply to 15,6V. Check power output is less than 9,3W Re-adjust power supply to 13,2V

1 Watt Unit

L	RF Output meter	–	RV6	Adjust for 1W output
	Re-adjust C193 for maximum and RV6 for 1W output			
M	RF Output	–	–	Reduce power supply to 10,8V. Check power output is greater than 0,75W
				Increase power supply to 15,6V. Check power output is less than 1,8W

Re-adjust power supply to 13,2V

25W UHF PA Module Fitted

Remove link in place of L56 and solder in 25W module. Set power supply to 13,6V

N	RF Output meter	–	C193,C194 C306	Adjust in order for maximum output power. Check this is greater than 25W. Switch to unit bandwidth extremes. Check that power output does not fall by more than 0,5 dB
	Ammeter	–	–	Check supply current is less than 8,5A

FINAL POWER OUTPUT CHECK

Note: Allow unit to cool before proceeding with final power setting.

25W Unit

(i) Set power supply to 13,6V.
(ii) Adjust RV6 for 25W output. Re-adjust C193, C306 for maximum and RV6 for 25W output.
(iii) Reduce power supply to 10,8V. Check output power is greater than 15W.
(iv) Increase power supply to 15,6V. Check output power is less than 40W.

15W Unit

(i) Set power supply to 13,2V.
(ii) Adjust RV6 for 15W output. Re-adjust C193, C306 for maximum and RV6 for 15W output Switch to unit bandwidth extremes. Check that power output does not fall by more than 0,5 dB.
(iii) Reduce power supply to 10,8V. Check power output is greater than 9W.
(iv) Increase power supply to 15,6V. Check power output is less than 24W.

10W Unit

(i) Set power supply to 13,2V.
(ii) Adjust RV6 to give 10W.
Re-adjust C193, C306 for maximum and RV6 for 10W output.
Switch to unit bandwidth extremes. Check that power output does not fall by more than 0,5 dB.
(iii) Reduce power supply to 10,8V. Check power output is greater than 6W.
(iv) Increase power supply to 15,6V. Check power output is less than 16W.

STEP	TEST EQUIPMENT	TEST POINT	TUNE	ADJUSTMENT
AUDIO ALIGNMENT				
A	Set AF generator level to 40mV, at 1 kHz. Set power supply to 13,2V.			
	Oscilloscope	TP9	R111	Observe the output of TP9. If necessary select R111 from the range of values 33Ω to 270Ω to give symmetrical clipping
B	Modulation meter		RV5	Adjust for peak system deviation
C	Reduce input signal level to 4 mV			
	Modulation meter	–	RV4	Adjust for 60% of peak deviation

Remake pozistor link R1/R2 or R1/R3

CONCLUSION

1. The power output can be adjusted, by means of RV6, to any level up to 6W (25W module not fitted) or 25W. However, slight re-alignment may be necessary.
2. Disconnect all items of test equipment. Re-fit circuit board into equipment case and check transmitter and receiver carrier frequencies as described under 'Netting Procedure' in Section 2. Restore antenna, loudspeaker and microphone connections, and return equipment to service.

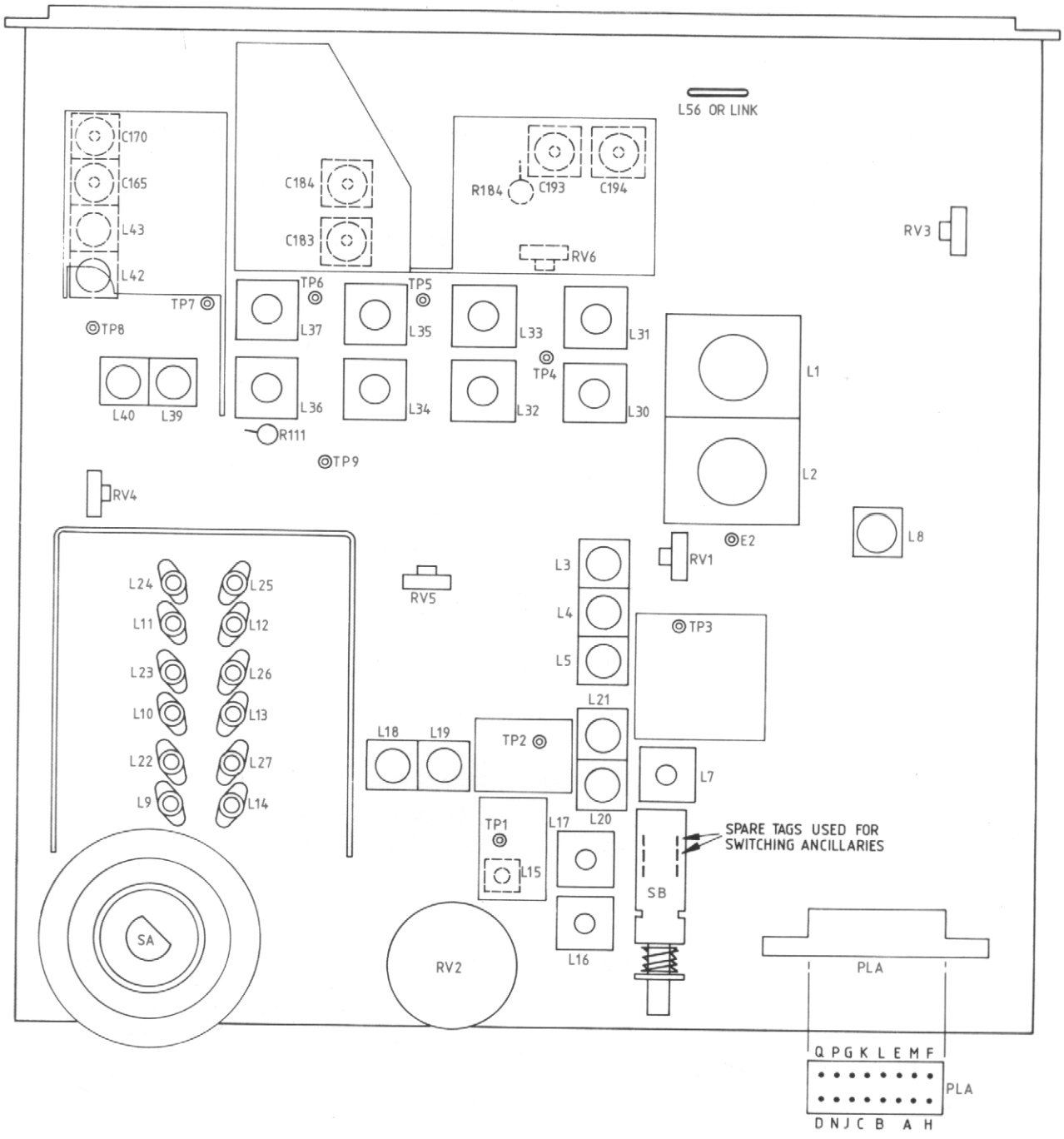

Fig. 4.4 Alignment Diagram

TESTS FOR MOBILE MICROPHONE AT29692/–

Circuit Diagram

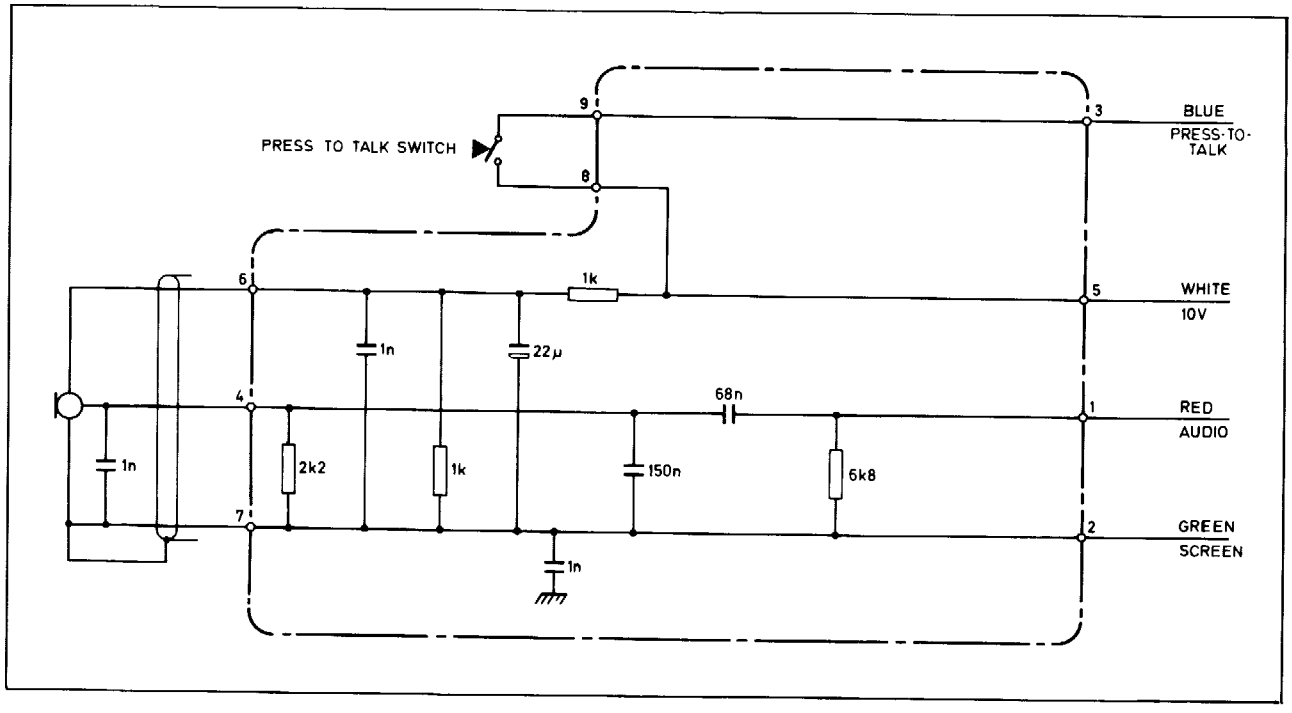

Test Equipment Required

Power Supply	10V, Kingshill 18VC10
Multimeter	AVO model 8
Oscilloscope	General Purpose
Load	5kΩ resistor

Connection of Test equipment

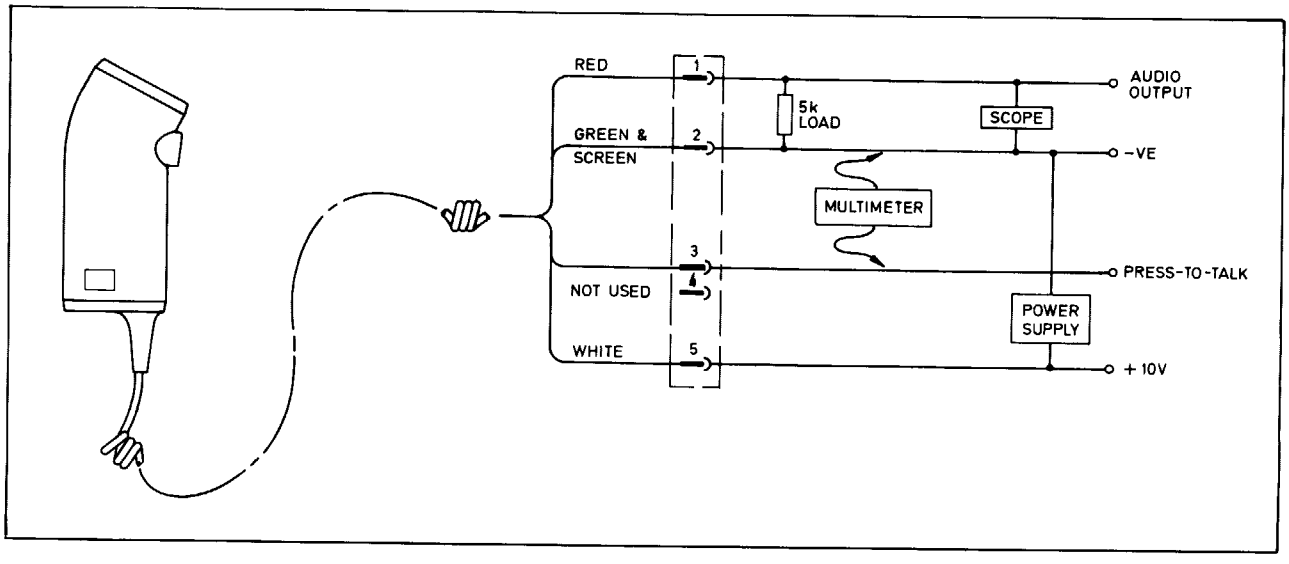

Procedure

1. Resistance Checks

   Set the multimeter to '$\Omega \times 100$' range and check that the resistance between pins 3 and 5 is greater than 1MΩ. Set the multimeter to '$\Omega \div 100$' range, activate the press-to-talk switch and check that the resistance falls to less than 10Ω.

   Re-set the multimeter to '$\Omega \times 100$' range and check that a resistance of greater than 10MΩ is available between all microphone output connections and:–

   (a) silver base of microphone housing

   (b) outer shell of PREH connection.

2. Connect the test equipment to the microphone as shown in the diagram.

> **CAUTION**
>
> **The insert used in this microphone incorporates an integrated circuit. Consequently, the 10V energising supply must be connected before any of the following checks are carried out.**

3. Sensitivity Checks

   Speak into the microphone in a normal conversational tone. Observe the waveform on the oscilloscope. Check that the audio output level is approximately 30mV peak-to-peak.

4. Transmission Timer Checks (if appropriate)

   Set multimeter to 10V DC range, hold down press-to-talk switch and check that the multimeter reading remains at 10V for between 30 and 60 seconds and then falls to zero. Release press-to-talk switch for a few seconds and check that the multimeter reading rises to 10V when the press-to-talk switch is again operated. (See Section 3 in this manual for Transmission Timer description, circuit and component layout diagrams).

SECTION 5

PARTS LIST

NOTATION

In the following Parts Lists component values are designated as follows:–

Capacitors Values given in micro Farads unless otherwise stated

22	=	22 microFarad	($F \times 10^{-6}$)
22n	=	22 nanoFarad	($F \times 10^{-9}$)
22p	=	22 picoFarad	($F \times 10^{-12}$)

Fractional values shown thus:

2μ2	=	2,2 microFarad	=	($2{,}2 \times 10^{-6}$)F
2n2	=	2,2 nanoFarad	=	($2{,}2 \times 10^{-9}$)F
2p2	=	2,2 picoFarad	=	($2{,}2 \times 10^{-12}$)F

Resistors Values given in Ohms unless otherwise stated

22	=	22 ohms	
22k	=	22 kilohms	(Ohms $\times 10^{3}$)
22M	=	22 Megohms	(Ohms $\times 10^{6}$)

Fractional values are shown thus:

2Ω2	=	2,2 ohms	
2k2	=	2,2 kilohms	($2{,}2 \times 10^{3}$) Ohms
2M2	=	2,2 Megohms	($2{,}2 \times 10^{6}$) Ohms

ORDERING OF SPARE PARTS

When ordering spares, please quote the description and Part No. of the item and the part number of the sub-assembly on which it is used together with the equipment code number given on the identity plate fixed to the equipment.

The right is reserved to fit alternative types of components with equal or improved performance to those quoted in the Parts List.

ABBREVIATIONS

cadmium	cad	steel	st
carbon film	c. film	printed wiring board	PWB
ceramic	cer	polyester	poly
countersunk	csk	tubular	tub
electrolytic	elect	wire wound	w.w.
		parts per million	ppm

UHF FRONT MOUNT

MOBILE RADIOTELEPHONE TYPE M296

AT00237

T1 Band – 405 – 440 MHz
U0 Band – 440 – 470 MHz

MISCELLANEOUS

***See headed list**

Description	**Part No.**	**Remarks/Code/Band**
Carrier	BT16826	**Item 10** standard mounting only
PWB Assembly Tx/Rx	AT28586/–	***Item 8**
Front Panel Assembly	AT13655/01	**Item 1** Pye ident label fitted
Front Panel Assembly	AT13655/02	**Item 1** Pye ident label not fitted
Blanking plate, channel	BT20158	Single channel
Crystal boot	BT36528	2 per channel
Machined case assembly	AT13609	**Item 3**
Installation instructions	TP821	
Operating instructions	TP960	
Scr. st. pan pozi M3 × 4mm	QJ11913/X	4/carrier to case
Scr. st. pan pozi M2,5 × 12mm	QJ11948/B	4/Rear panel
Scr. st. pan slot, S/T No. 4 × ¼''	QU41104/X	1/cover screen osc.
Scr. csk, skt, M3 × 6mm	QJ08536/Q	2/front panel
Lead Assembly	AT36581	for equipment fitted with TED1 or TED2 Links Q1/P1 to (o) C2 for equipment fitted with TED6, Links Q1/P1 to (o) C1, (o) C2
Lead Assembly	AT36610	for equipment fitted with TED1, TED2 or TED6 links E1 to E2
Lead Assembly	AT36611	for equipment fitted with TED1, TED2 or TED6 links D1 to D2
Lead Assembly	AT36612	for equipment fitted with TED1, TED2 or TED6 links M1 to P2
Lead Assembly	AT36582	for equipment fitted with TED6 Links P1/Q1 to (o) C1 (o) C2
RADIOTELEPHONE INSTALLATION ITEMS	**AT29604/01**	for equipment supplied with standard mounting kit and loudspeaker
	AT29604/02	for equipment supplied with standard mounting kit less loudspeaker
	AT29604/03	for equipment supplied with fascia mounting kit and loudspeaker
	AT29604/04	for equipment supplied with fascia mounting kit less loudspeaker
Power lead assembly	AT36440	all versions
Bagged items	**AT29605**	**all versions**
consisting of:–		
Extractor tool	BT29007	cradle
3-way connector block	BT30081	
Information label	BT38011	call sign
10A fuse	FF99007	
Fuseholder	FH02839	
Plug BNC straight, 50Ω	FP99100	1/antenna feeder
Tyraps, 6 off	QA04424	as required
Screws, pan, slot, S/T, No. 10 × ½	QQ41208/X	2/loudspeaker, 4/cradle
Screws, pan, slot, S/T, No. 6 × ¾	QW41212/X	2/fuseholder, 2/connector block

RADIOTELEPHONE INSTALLATION ITEMS (Contd)

Description	Part No.	Remarks/Code/Band
Cradle assembly	AT12405	/01 and /02 only **Item 9**
Loudspeaker assembly	AT10877/02	*/01 and /03 only
Cradle assembly	AT13723	/03 and /04 only
Clamping plate, 2 off	BT20167	/03 and /04 only
Bezel	BT36533	/03 and /04 only
Bracket, 2 off	FB00673	/03 and /04 only
Bagged Items	AT29610	/03 and /04 only
consisting of:–		
Hole plugs, 4 off	BT37521	radiotelephone case
Nut, hex, M4, 2 off	QA11607/X	bracket to cradle assembly
Washers, 2BA	QA13022/X	2/bracket to cradle assembly 2/clamping plate to cradle assembly
Screws, hex, slot, M4 × 6, 2 off	QJ13276/X	2/clamping plate to cradle assembly
Screws, 'Pozi', pan, M4 × 8, 2 off	QJ11917/X	2/bracket to cradle assembly
MICROPHONE INSTALLATION ITEMS	**AT85791**	
Strain relief clamp	BT16043	Microphone lead
Support	BT26617	Strain relief clamp
Microphone rest assembly	276661	
Scr. st. pan pozi No. 6 × 12,5mm	QJ07663/X	2/strain relief clamp support
Scr. st. pan, slot, S/T No. 6 × 3/8''	QW41206/X	2/microphone rest
MICROPHONE ASSEMBLY	AT29692/02 AT29692/05	Fist mic – FM including integral timer
Insert assembly	AT13420	
Press-to-talk assembly	AT13421	
Switch	FS07193	
Grille	BT35824	
Coiled lead assembly	AT11405/01	
Case front assembly	AT13422	
Case back assembly	AT13423	
Hexagonal pillar	BT04402	2/PWB, /05 only
Scr. st. pan pozi, M2,5 × 5mm	QJ11944/B	4/PWB, /05 only
Transmission Timer	**AT28589**	**/05 only**
comprising:–		
Transistor BFR80	FV05757	TR1
Diode 1N4148	FV05808	D1
Transistor BC547B	FV05891	TR2, TR3
Capacitor, elect, 10V ±20% 33μ	PS23315	C1
Resistor 470 ±5% 0,25W	PM01432	R4
Resistor 680 ±5% 0,25W	PM01434	R1
Resistor 47k ±5% 0,25W	PM01456	R3
Resistor 820k ±5% 0,25W	PM01471	R2
LOUDSPEAKER ASSEMBLY	**AT10877/02**	
Loudspeaker	FS11525	
2-way housing	FT10535	
Tin plated pin	FT10537	
Insulating sleeve	FS22184/04	
Identification sleeve	FS22192/06	
Cover	BT15372/01	
Bracket	BT11251	
Label (Pye)	BT18990	
Mounting strap	BT27020	
Cloth, rear cover	BT27318	
Speaker grille	BT35823	
Captive nut	QA00114	
Washer st 2BA	QA13002/X	2/Strap to cover
Spring washer	QA13464/B	2/Strap to cover
Screw, hex, pozi, No. 10B × 20mm	QJ06645/X	
Screw, st. pan pozi, 4/20 × 5/16''	QJ08268/A	
Cloth, loudspeaker	BT27347	

25W UHF PA MODULE **AT28585**

Description				Part No.	Remarks/Code/Band
Capacitors:–					
2p2	±5%		cer. tub	PN01074	C307
10p	±5%	NPO	cer. tub	PN09047	C302,303,308,309
1n	±10%	100V	cer. plate	PN99600	C304
4n7	±10%	100V	cer. plate	PN99604	C300,301
100n	±10%	63V	poly	PQ99511	C305
Variable	2–15p			PV07270	C306
Resistors:–					
10	±5%	0,125W	c. film	PL99750	R300
Transistors:–					
CM30	12–CD			FV33815	TR300†
†Contains beryllium oxide					
Miscellaneous:–					
Coil Assembly				AT30080	L301
Choke Assembly				AT31961/07	L300
Loop				AT32933	L302
Loop				AT32936	L303
PA Screen				BT26312	
Scr. st. pan, 'pozi' M2,5 × 10mm				QJ11947/X	2/screen
Solder tag, 6BA, 2 off				FT00049	

PWB ASSEMBLY TX/RX **AT28586/–**

AT28586/01	–	Single channel, U0 Band, 25 kHz channel spacing, temperature compensated
AT28586/02	–	Six channels, U0 Band, 25 kHz channel spacing, temperature compensated
AT28586/03	–	Single channel, U0 Band, 20 kHz channel spacing
AT28586/04	–	Six channel, U0 Band, 20 kHz channel spacing
AT28586/05	–	Single channel, T1 Band, 25 kHz channel spacing temperature compensated
AT28586/06	–	Six channel, T1 Band, 25 kHz channel spacing temperature compensated
AT28586/07	–	Single channel, T1 Band, 20 kHz channel spacing
AT28586/08	–	Six channel, T1 Band, 20 kHz channel spacing
AT28586/09	–	Single channel, T1 Band Tx, U0 Band Rx, 25 kHz channel spacing
AT28586/10	–	Six channel, T1 Band Tx, U0 Band Rx, 25 kHz channel spacing

Resistors:–

0Ω1	±10%	2,5W	wirewound	PL40113	R184
1	±10%	0,25W	c. film	PM01400	R39,65,83A
2Ω2	±10%	0,25W	c. film	PM01404	R38
10				PM01412	R150,176,178,179,182,144A,148
22				PM01416	R193
22				PM01416	
27				PM01417	
33				PM01418	
39				PM01419	
47	±5%	0,25W	c. film	PM01420	R111, select on test
56				PM01421	
68				PM01422	
82				PM01423	
100				PM01424	
120				PM01425	
150				PM01426	
180				PM01427	R186 select on test
220				PM01428	
270				PM10429	
330				PM01430	

Resistors Contd:–

Description				Part No.	Remarks/Code/Band
390				PM01431	R186, select on test
470				PM01432	
47				PM01420	R177
56				PM01421	R66
68				PM01422	R36,104
100				PM01424	R4,6,13,56,59,60,64,86,91,92,108, 115,129,130,137,145,158,160,164 165,168,169,172,173
120				PM01425	R106
150				PM01426	R70,116,152,187,190
220				PM01428	R3 –/01,/02,/03,/04,/09,/10, R37,63,69,110
390				PM01431	R114 R3 –/05,/06,/07,/08
470				PM01432	R17,26,84,105,140,156,171,189, 191,181
560				PM01433	R1,76,185
680				PM01434	R16,55,159,161 R47 – Single chan R47-52 – Six chan
820				PM01435	R58,97,163,167,175
1k	±5%	0,25W	c. film	PM01436	R40,87,89,90,93,141
1k2				PM01437	R22,27,31,81,98,101,144,155,174
1k5				PM01438	R2,8,10
1k8				PM01439	R18,19,75
2k2				PM01440	R72,96,100,113,128,151,154,192
2k7				PM01441	R125
3k3				PM01442	R147
3k9				PM01443	R12,15,95
4k7				PM01444	R79,80,85,99
5k6				PM01445	R57,62,67,119,146,162,166
6k8				PM01446	R121
8k2				PM01447	R14,78,117,127,153
10k				PM01448	R21,34,73,74,103,109,112,120 157,170,188,34A
12k				PM01449	R118,123,124,180
15k				PM01450	R35,61,68,77,126
18k				PM01451	R94,122,143
39k				PM01455	R54
47k				PM01456	R20,28,71
56k				PM01457	R53
100k				PM01460	R7,9,11,23,32,33,82,88,102,107,138 139,142
120k				PM01461	R5,25
560k				PM01469	R24
680k				PM01470	R29,30
100k	±5%	0,125W	c. film	PL99792	R194
Pozistor 6k ±20%				PL23136	R41,131 Single chan R41-46, 131-136 – Six chans
Thermistor				PL23088	R83
Potentiometer, 4k7 ±20% lin				PL03370	RV4
Potentiometer, 10k ±20% lin				PL03647	RV1,3
Potentiometer, 470Ω ±20% lin				PL06730	RV5
Potentiometer, 5k log with knob				PL09217	RV2
Potentiometer, 100Ω ±20% lin				PL99009	RV6

Capacitors:–

0p33	±10%		cer. tub.	PN00115	C150
0p56				PN00123	C42
0p68				PN00124	C144
1p8	±0p25	63V	cer. plate	PN99560	C163,137
2p2				PN99561	C130
2p7				PN99719	C65
3p3				PN99562	C48,54,209
3p9				PN99563	C49

Capacitors Contd.

Description				Part No.	Remarks/Code/Band
5p6	±0p25		cer. tub	PN04142	C2,173,196-199
6p8	±0p25	63V	cer. plate	PN99566	C149
8p2	±0p25	63V	cer. plate	PN99567	C167
10p	±5%	NPO	cer. tub	PN09047	C178,188,190
10p				PN99568	C18,121,122,142
15p				PN99570	C154,155
22p				PN99572	C44,147,148
27p				PN99573	C41
33p				PN99574	C45,210
33p				PN99845	C40
39p				PN99575	C7
47p	±2%	63V	cer. plate	PN99576	C115,134
47p				PN99848	C39
56p				PN99577	C61
68p				PN99578	C119,64
82p				PN99579	C140,141 – U0 Band only
100p				PN99580	C129,135,62 C140,141 – T1 Band and T1/U0 Band only
150p				PN99582	C112
180p				PN99583	C20
220p				PN99584	C116,109A
270p				PN99585	C110,109
470p				PN99599	C206,207
1n	±10%	100V	cer. plate	PN99600	C1,3,4,8,14,31,46,47,50,51,53,55 57,76,78,80,105-107,111,113 118,125-127,131-133,136,138,139,143 145,146,151-153,156-161,166,168 175-177,180,186,187,189,1A,28A, 38A,55A,76A,209
2n2				PN99602	C89,91,93,100,101,103
2n2	±2,5%	100V	poly	PQ99617	C95,98
4n7	±10%	100V	cer. plate	PN99604	C5,9,11-13,15,22,23,26,27,30,34,37 38,43,52,56,58-60,66,67,71,73,83,86, 97,108,114,120,162,164,171,172,182 185,202,203
10n	±2,5%	100V	poly	PQ99621	C96,99
100n	±10%	63V	poly	PQ99511	C6,10,16,17,24,33,36,70,94,124,128 169,174,179,181,191,192,201
0μ1	±20%		tant	PS99201	C117
1μ	±20%	35V	elect	PS99502	C63,72
1μ		63V	Al. elect	PS99820	C25
2μ2		63V	Al. elect	PS99821	C28,29,68,69,74,79,82
4μ7	±20%	25V	elect	PS99504	C75,87
10μ	±20%	15/16V	elect	PS99505	C19
33μ		16V	elect	PS99807	C77,81,84,90,92,102,104,123
100μ	±20%	3V	elect	PS99510	C32,88
470μ	−10+50%	16V	Al. elect	PS45808	C200,204
470μ		16V	elect	PS99809	C35
Variable	2–10p	250V		PV07670	C165,170,183,184,193,194
4n7	±10%	63V	cer. plate	PN99813	C21

Filters:–

Crystal filter, 25 kHz	FC03538	FL1 – /01,/02,/05,/06,/09,/10
Crystal filter, 20 kHz	FC99040	FL1 – /03,/04,/07,/08
Ceramic filter, 455 kHz	FC99020	FL2 – /01,/02,/05,/06,/09/10
Ceramic filter, 455 kHz	FC99021	FL2 – /03,/04,/07,/08

Semiconductors and Integrated Circuits:–

IF Amp and discriminator	FU07680	IC1
Audio amplifier	FU09725	IC2
Active rectifier	FU99073	IC3
Diode 1N4148	FV05808	D1–10,17
Diode 1N4001	FV05840	D14,11,12,16
Diode ZF8,2	FV08030	D13
Diode MR751	FV08961	D15
LED Red	FV05858	LED 1

Inductors Contd

Description	Part No.	Remarks/Code/Band
Coil assembly	AT32156/04	L21
Coil assembly	AT32156/11	L20
Coil assembly	AT30082	L1
Coil assembly	AT30082/02	L2
Coil assembly	AT32156/03	L3,5
Coil assembly	AT32156/10	L4
Coil assembly	AT32156/07	L39,40,42,43
Coil assembly	AT32171/10	L22 – single channel L22 to L27 six channel
Coil assembly	AT32172/09	L9 – single channel L9 to L14 six channel

T1/U0 Band

Miscellaneous Items:–

Rear panel assembly	AT13675/02	See headed list
Support, moulding	BT26618/01	1/lampholder LED1
Knob, on-off	BT37460	
Knob, channel	BT37459	
Compression ring	QA04133	1/channel knob
Channel switch	FS07199	SA
Push-button switch	FS07191	SB
Relay	FR03871	RLA
Interconnection housing	BT37517	
Heatsink	BT37523	1/IC2
Right-angle header, 16-way	FC00838/16	PLA
Crystal, 20,945 MHz	FC03013/02	XL13
Bead	FC36151	FB1,2
10A fuse	FF06803	FS1
Lead assembly	AT36615	
Screening can	FC00126	1/1st oscillator
Screening cans, 2 off	FT03520	1/2nd oscillator, 1/Rx osc. Mult
Can assembly	AT12487	1/L18,L19
Can assemblies, 3 off	AT12487/04	1/L20,L21 1/L39,L40 1/L42,L43
Screen Lid 2	BT13752	1/PA
Screen Lid	BT13753	1/multiplier
Cavity screw	BT08621	
Link assembly	AT13704	
Link assembly	AT13705	
Oscillator cover	BJ30740	
Can, 2 off	BT15805	2/Rx osc. multipier
Screening can	BT15812	1/mixer screen
Pad	BT24685	1/relay screen to C200,C204
Oscillator screen	BT26305/01	
Antenna filter screen	BT26311	
Changeover relay screen	BT26313	underside
PA Screen 1	BT26314	underside
PA Screen 2	BT26315	underside
Receiver multiplier screen	BT26316	underside
Changeover relay screen	BT26317/01	upperside
PA screen 1	BT26318	upperside
PA screen 2	BT26319	upperside
PA screen 3	BT26320	upperside
Washer, 2 off	BT29237	2/oscillator cover
PWB standoff button, 2 off	BT36480	
Machined cavity	BT36892	
Earthing contact	BT36895	
Screening can, 11 off	FT03521	1/L7,1/L16,1/L17,1/L30-L37
Clip, 2 off	QA04097	2/mixer can
Triple can assembly	AT12487/23	1/L3 to L5 – U0 band and T1/U0 Band only
Triple can assembly	AT12487/25	1/L3 to L5 T1 Band only
Lampholder	FL17849	LP1
Lamp, 14V, 0,09A	FL17850	LP1
Heatsink	QA05841	TR36
Heatsink, push-fit	QA99008	TR38
Nut, st, M2,5 hex.	QA11604/B	2/housing interconnection
Nut, hex, st, M3	QA11605/X	1/IC2, 1/TR37, 1/TR43

Miscellaneous Items Contd

Description	Part No.	Remarks/Code/Band
Scr. st S/T No. 2 × 5/16''	QJ08871/X1	1/lampholder 1/support moulding
Scr. st. pan 'pozi', M2,5 × 5mm	QJ11944/B	2/housing interconnection 2/antenna screen
Scr. st. pan 'Pozi', M2,5 × 6mm	QJ11945/B	6/cavity
Scr. ch. nylon 6BA × 1/4''	QJ05001	2/cavity
Scr. panhead nylon M2,5 × 6mm	QJ10700	2/cavity
Scr. st. pan 'pozi', M3 × 6mm	QJ11901/X	1/IC2
Scr. st. pan 'pozi', M3 × 8mm	QJ11902/X	1/TR37, 1/TR43, 2/Rear panel to PWB
REAR PANEL ASSEMBLY	**AT13675/02**	
Rear panel	AT13720	**Item 4**
Rear panel cover	BT15822	**Item 7**
Mounting bracket assembly	AT13677	**Item 6**
Hexagonal pillar	BT04134	4/Rear panel cover
Cable, clamp	BT16054	flying leads **Item 5**
Core, ferrox cube	FC02103	6 off
Ferrite bead 35–530–31	FC36172	1/+ve power lead
Scr. st. pan 'pozi' M2,5 × 5mm, 5 off	QJ11944/B	1/mounting bracket, 4/cover assembly
Scr. st. pan 'pozi', M2,5 × 12mm, 2 off	QJ11948/B	2/cable clamp
Grommet, 3/8'', 2 off	FG02221	
Solder tag, M2,5, 2 off	FT00095	
Spacing Washers, M2,5, 2 off	QA15004/B	
Power Lead Assembly	**AT36552/01**	
consisting of:–		
3-pin 'mate n lock' socket	FS40867	Power socket
Sockets, 2 off	FS40870	forms part of 'mate n lock'
Black wire, 63/0,2mm	FW05093/K	235mm
Red wire, 63/0,2mm	FW05093/R	280mm
Microphone Lead Assembly	**AT36553/01**	
consisting of:–		
Insulating sleeve	BT29957	
4-way cable	FC08150	280mm
5-way socket	FS47513	Mic Socket
Antenna Lead Assembly	**AT36584/02**	
consisting of:–		
Feedthrough Connector	FC03410	
Coaxial cable, 50Ω	FC04530	250mm
BNC Jack Socket	FS48217	Antenna Socket
Loudspeaker Lead Assembly	**AT10765/17**	
consisting of:–		
Twin black cable, 14/0076	FC04537	230mm
2-way housing	FT10536	LS socket
Tin plated sockets, 2 off	FT10538	forms part of LS Socket

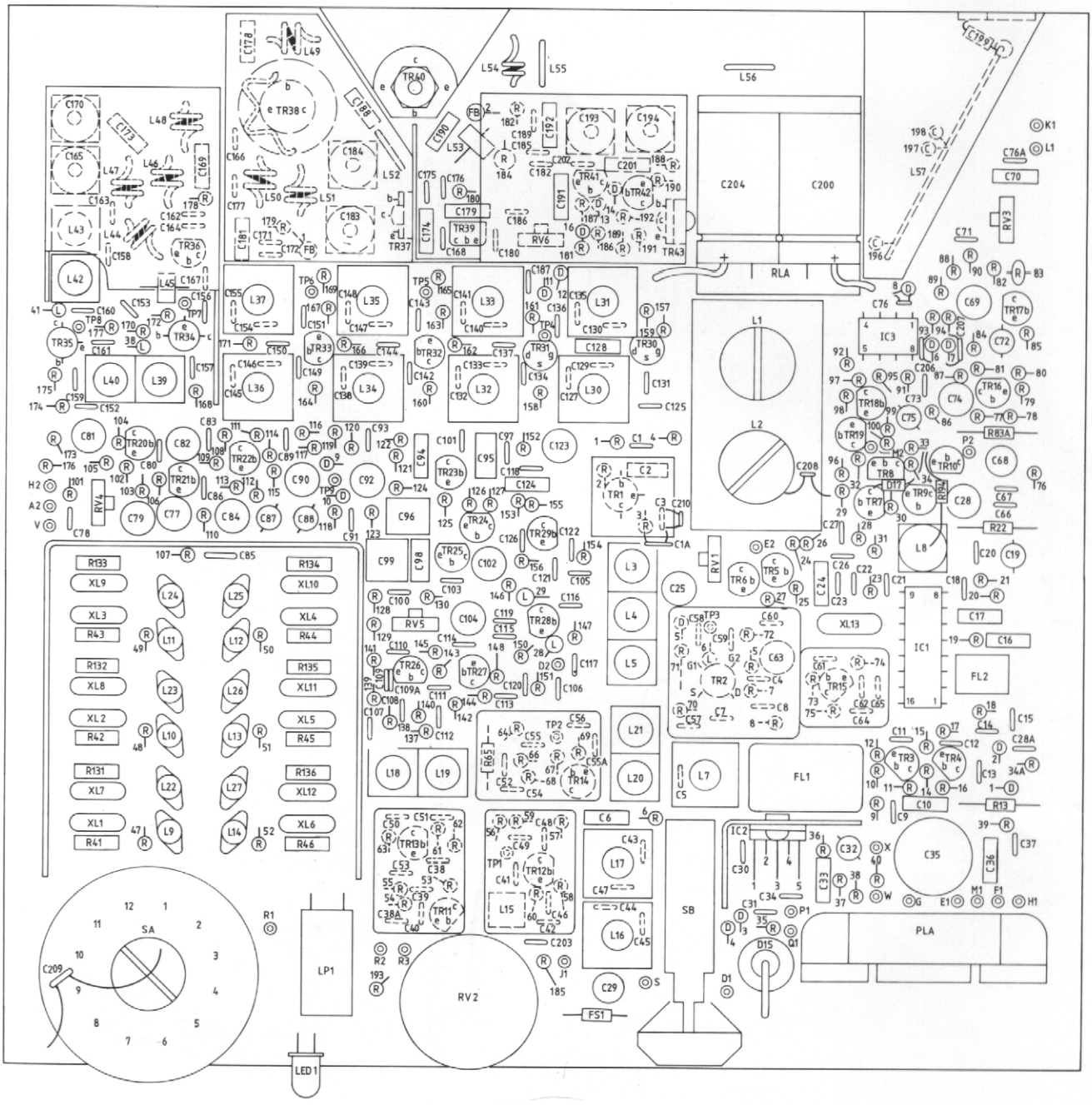

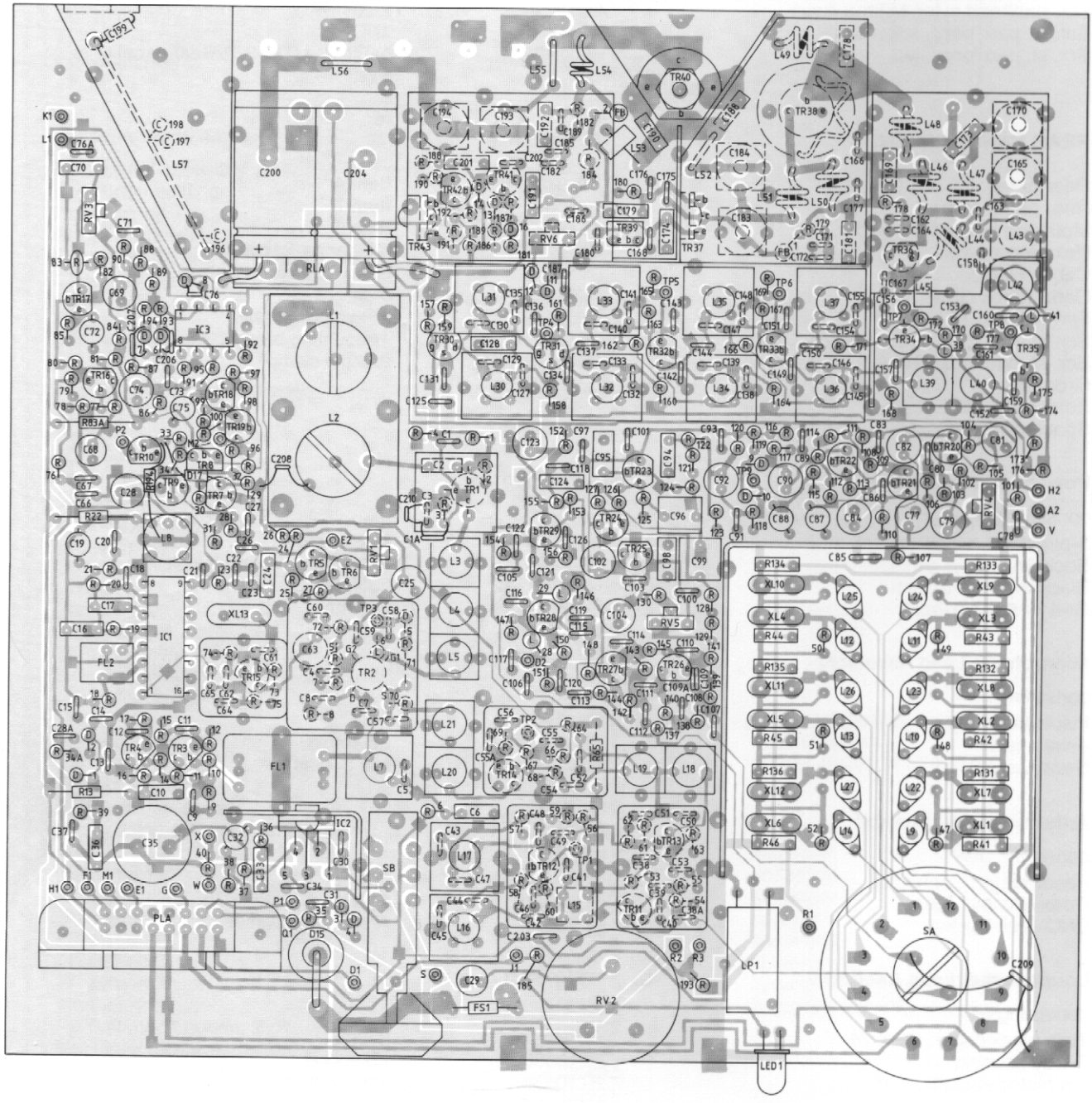

FIG. 6.1 M296 COMPONENT LOCATION DIAGRAM – MOTHERBOARD

TP264/1

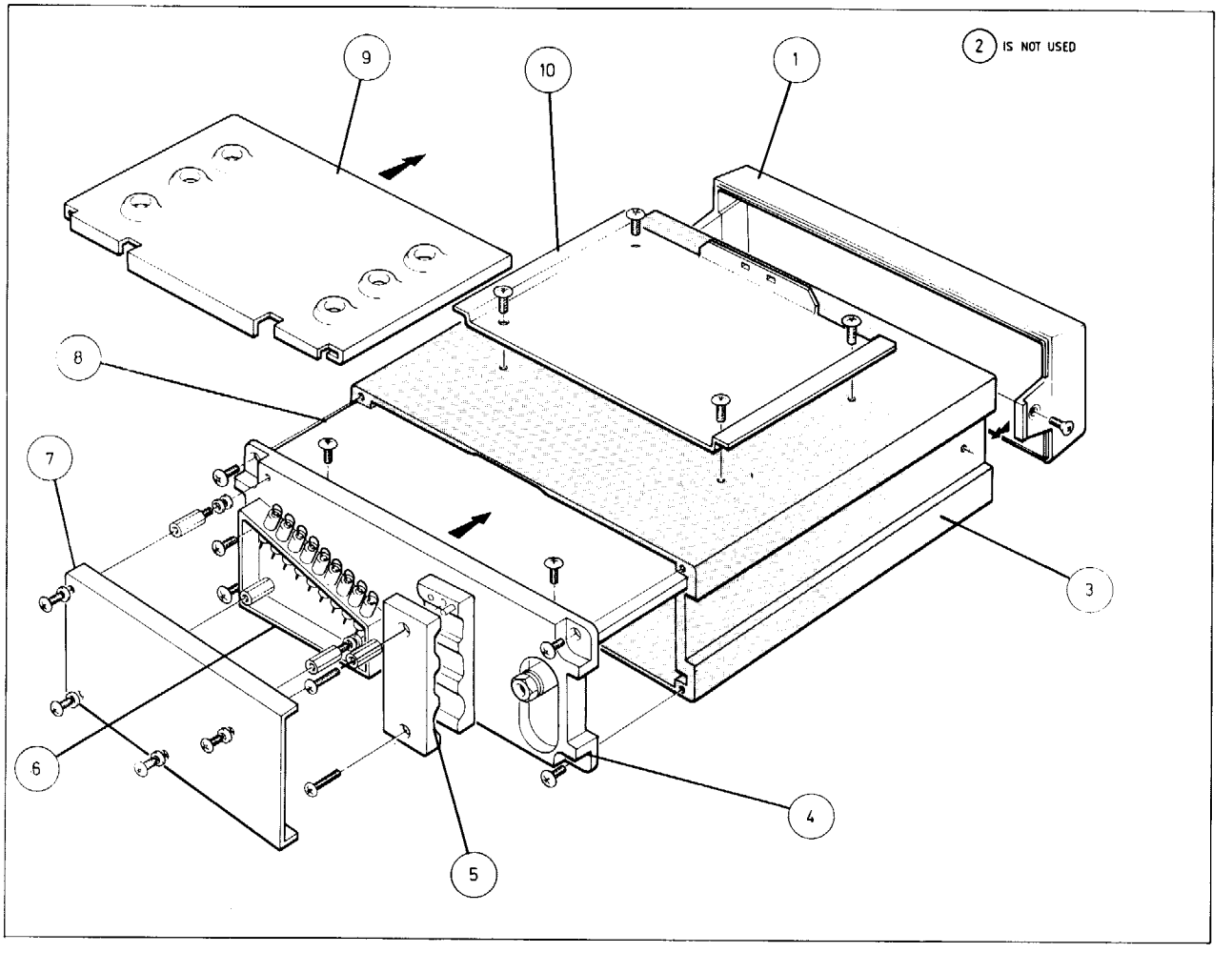

Fig. 5.1 Exploded View

Note: The identification numbers shown above appear against the relevant items in the Parts List.

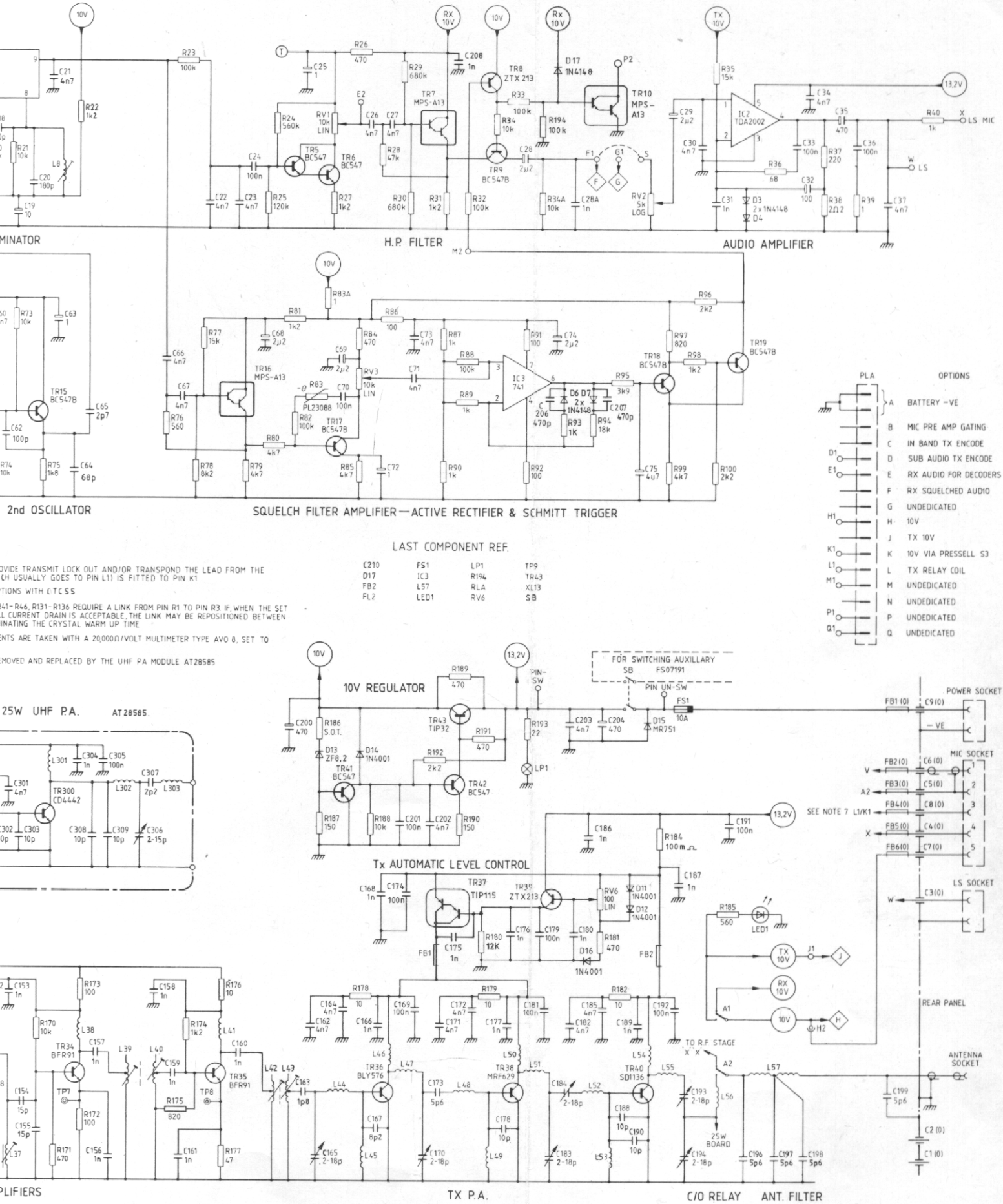

LAST COMPONENT REF.

C210	FS1	LP1	TP9
D17	IC3	R194	TR43
FB2	L57	RLA	XL13
FL2	LED1	RV6	SB

OVIDE TRANSMIT LOCK OUT AND/OR TRANSPOND THE LEAD FROM THE
CH USUALLY GOES TO PIN L1) IS FITTED TO PIN K1
TIONS WITH CTCSS
241-R46, R131-R136 REQUIRE A LINK FROM PIN R1 TO PIN R3 IF, WHEN THE SET
L CURRENT DRAIN IS ACCEPTABLE, THE LINK MAY BE REPOSITIONED BETWEEN
INATING THE CRYSTAL WARM UP TIME
ENTS ARE TAKEN WITH A 20,000Ω/VOLT MULTIMETER TYPE AVO 8, SET TO
EMOVED AND REPLACED BY THE UHF PA MODULE AT28585

25W UHF P.A. AT28585

FIG. 6.2 M296 TRANSMITTER/RECEIVER CIRCUIT DIAGRAM

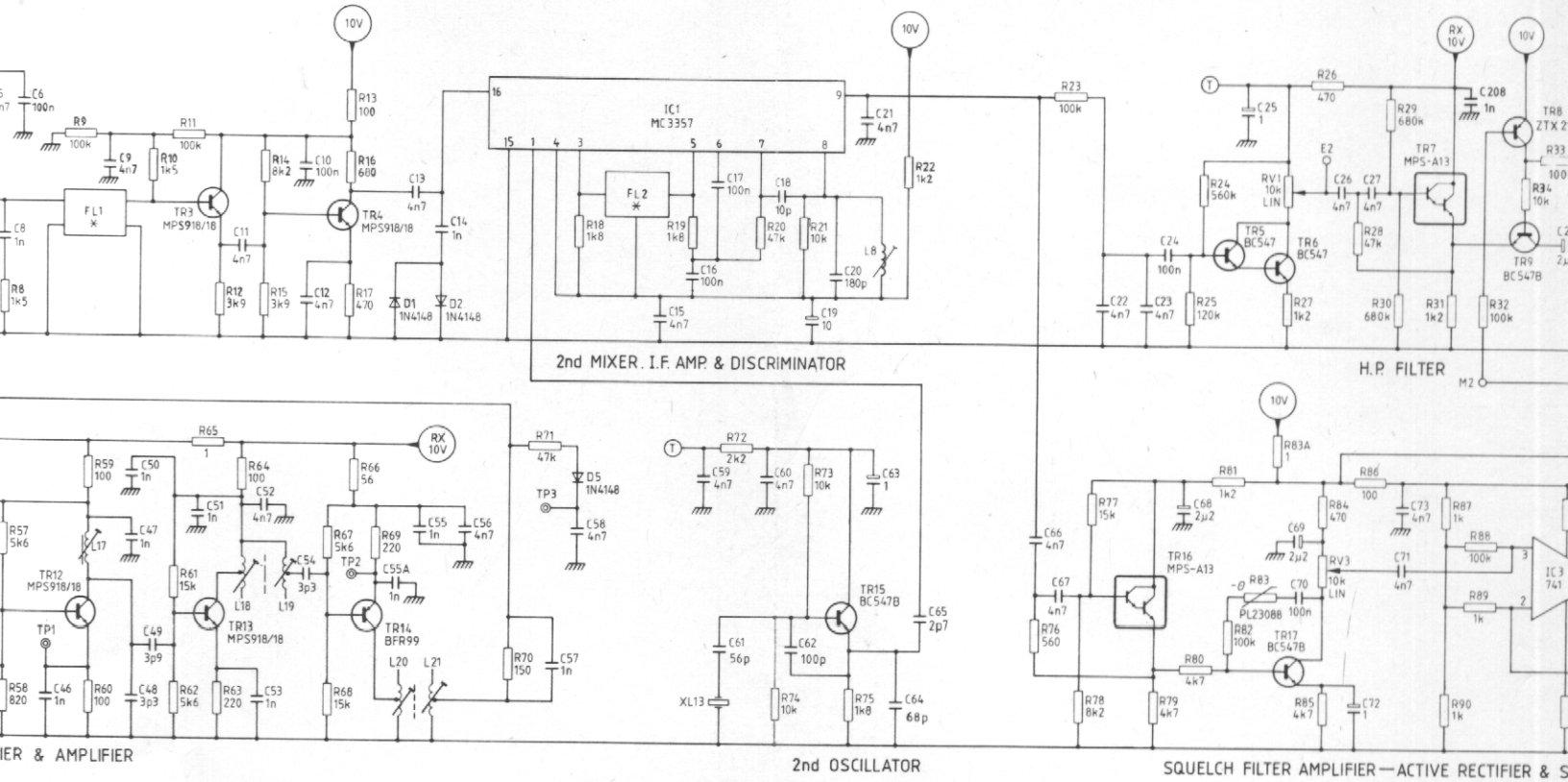

NOTES

MPONENTS ARE PREFIXED (0)

FIED COMPONENTS SEE PARTS LIST

LECTED FROM E12 VALUES IN THE RANGE 100Ω TO 470Ω TO GIVE 10V ± 0,2V FROM
LATOR FOR AN INPUT OF 13,2V.

ECTED FROM E12 VALUES IN THE RANGE 33Ω TO 270Ω TO GIVE SYMMETRICAL CLIPPING
RM AT TP9

PTIONS ARE FITTED, A LINK IS REQUIRED BETWEEN PIN F1 AND PIN S. IF OPTIONS ARE
LINK MUST BE REPOSITIONED BETWEEN PIN S AND PIN G1

ONS ARE FITTED A LINK FROM PIN M1 TO PIN P2 IS NEEDED TO MAKE THE BUSY LAMP FUNCTIONAL

7 FOR OPTIONS WHICH PROVIDE TRANSMIT LOCK OUT AND/OR TRANSPOND THE LEAD FROM THE MIC SOCKET PIN 3 (WHICH USUALLY GOES TO PIN L1) IS FITTED TO PIN K1

8 LINK D1 AND D2 FOR OPTIONS WITH CTCSS

9 THE CRYSTAL HEATERS R41-R46, R131-R136 REQUIRE A LINK FROM PIN R1 TO PIN R3. IF, WHEN THE SET IS SWITCHED OFF, A SMALL CURRENT DRAIN IS ACCEPTABLE, THE LINK MAY BE REPOSITIONED BETWEEN PIN R1 AND PIN R2, ELIMINATING THE CRYSTAL WARM UP TIME

10 DC VOLTAGE MEASUREMENTS ARE TAKEN WITH A 20,000Ω/VOLT MULTIMETER TYPE AVO 8, SET TO THE 10V DC RANGE

11 FOR 25W SETS L56 IS REMOVED AND REPLACED BY THE UHF PA MODULE AT28585

LAST COMPONENT REF.

C210	FS1	LP1	T
D17	IC3	R194	T
FB2	L57	RLA	X
FL2	LED1	RV6	S

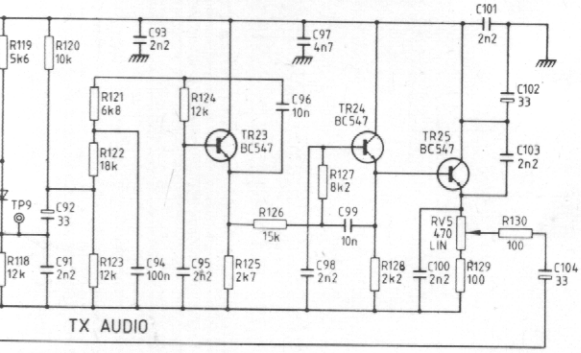

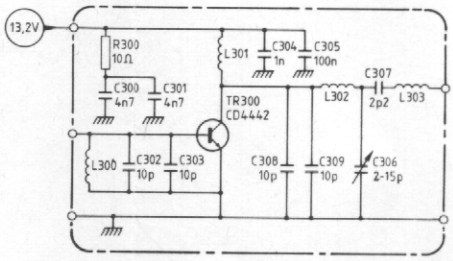

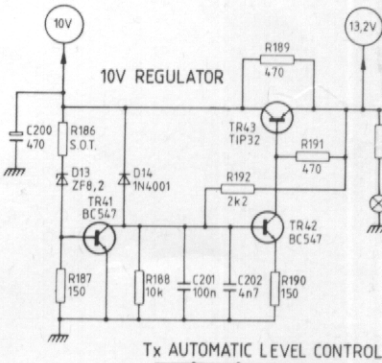

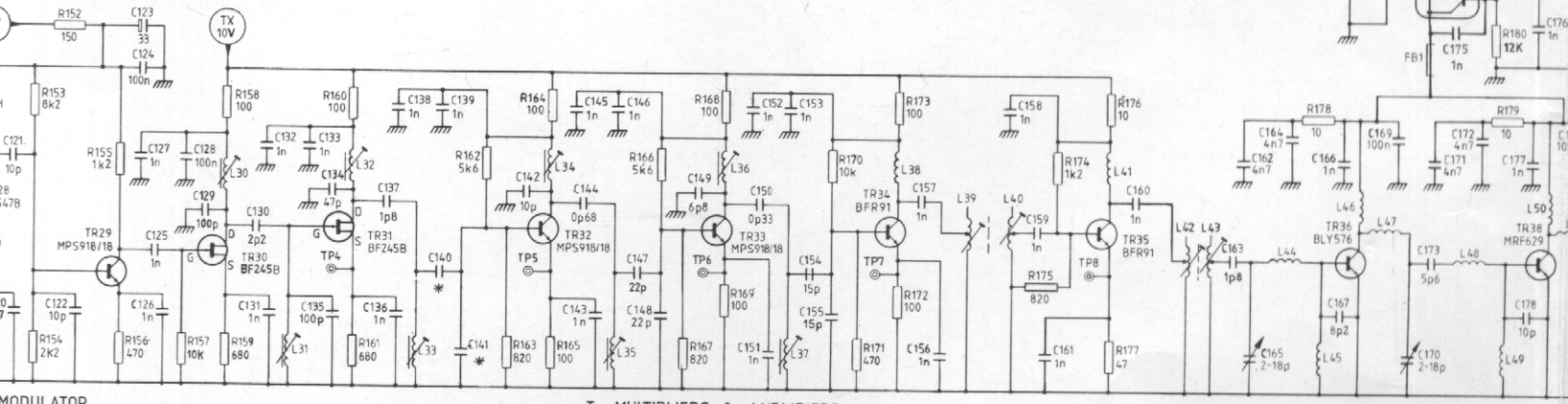

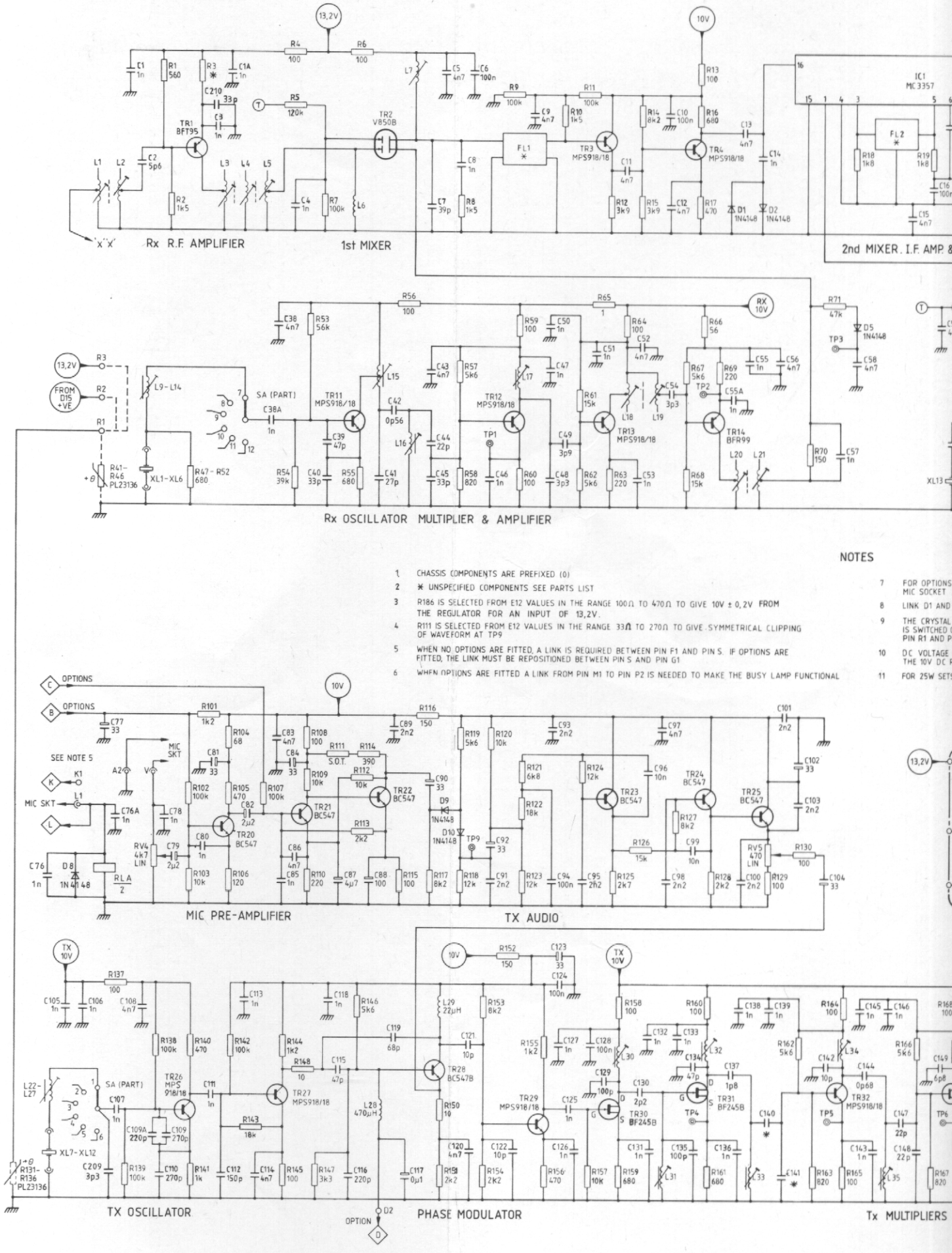
Rx R.F. AMPLIFIER
1st MIXER
2nd MIXER. I.F. AMP. &
Rx OSCILLATOR MULTIPLIER & AMPLIFIER
MIC PRE-AMPLIFIER
TX AUDIO
TX OSCILLATOR
PHASE MODULATOR
Tx MULTIPLIERS
NOTES
1. CHASSIS COMPONENTS ARE PREFIXED (0)
2. * UNSPECIFIED COMPONENTS SEE PARTS LIST
3. R186 IS SELECTED FROM E12 VALUES IN THE RANGE 100Ω TO 470Ω TO GIVE 10V ± 0,2V FROM THE REGULATOR FOR AN INPUT OF 13,2V.
4. R111 IS SELECTED FROM E12 VALUES IN THE RANGE 33Ω TO 270Ω TO GIVE SYMMETRICAL CLIPPING OF WAVEFORM AT TP9
5. WHEN NO OPTIONS ARE FITTED, A LINK IS REQUIRED BETWEEN PIN F1 AND PIN S. IF OPTIONS ARE FITTED, THE LINK MUST BE REPOSITIONED BETWEEN PIN S AND PIN G1
6. WHEN OPTIONS ARE FITTED A LINK FROM PIN M1 TO PIN P2 IS NEEDED TO MAKE THE BUSY LAMP FUNCTIONAL
7. FOR OPTIONS MIC SOCKET
8. LINK D1 AND
9. THE CRYSTAL IS SWITCHED PIN R1 AND P
10. DC VOLTAGE THE 10V DC
11. FOR 25W SETS



Pye Telecom

Pye Telecommunications Ltd
St Andrews Road Cambridge
England CB4 1DW
Tel: Cambridge (0223) 61222
Telex: 81166 (PYETEL G)

Printed in England © 1980